ECEN720: High-Speed Links Circuits and Systems Spring 2023

Lecture 2: Channel Components, Wires, & Transmission Lines

Sam Palermo
Analog & Mixed-Signal Center
Texas A&M University

Announcements

- Homework 1 due today
- Lab
  - Prelab 1 due Jan 30
  - Lab 1 report and Prelab 2 due Feb 6
  - TA Tong Liu
    - liut@tamu.edu
    - Office Hours M 10AM-12PM, WEB 160
- Reference Material Posted on Website
  - TDR theory application note
  - S-parameter notes

Agenda

- Channel Components
  - IC Packages, PCBs, connectors, vias, PCB Traces
- Wire Models
  - Resistance, capacitance, inductance
- Transmission Lines
  - Propagation constant
  - Characteristic impedance
  - Loss
  - Reflections
  - Termination examples
  - Differential transmission lines

Channel Components

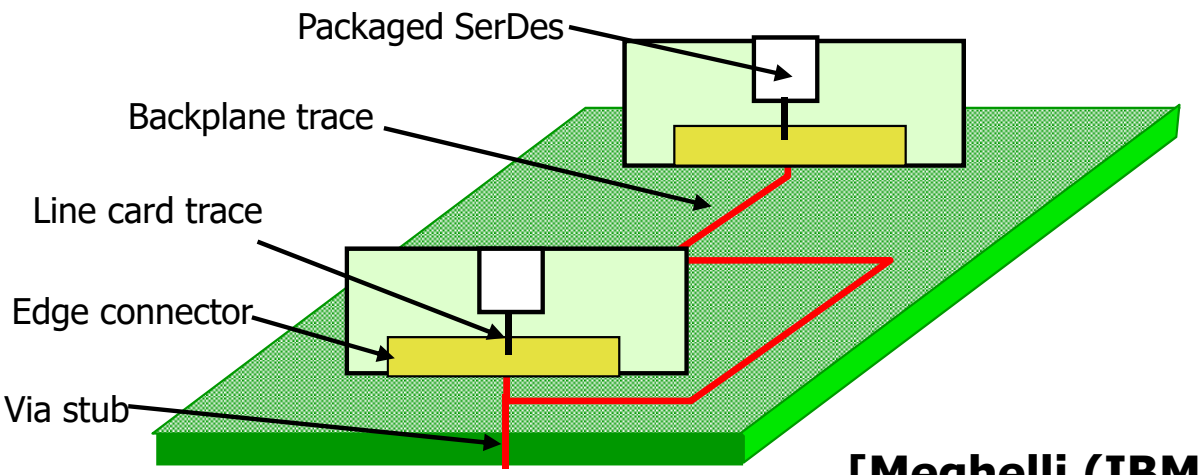

[Meghelli (IBM) ISSCC 2006]

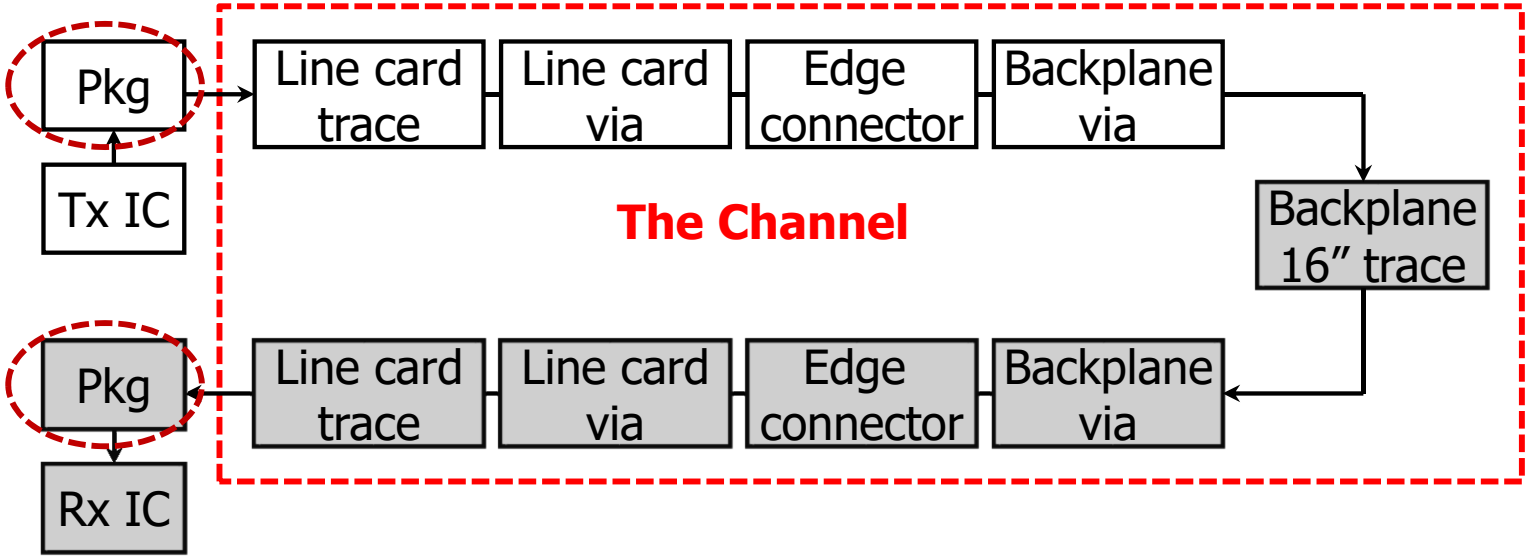

IC Packages

- Package style depends on application and pin count
- Packaging technology hasn't been able to increase pin count at same rate as on-chip aggregate bandwidth
  - Leads to I/O constrained designs and higher data rate per pin

Package Type	Pin Count
Small Outline Package (SOP)	8 – 56
Quad Flat Package (QFP)	64 - 304
Plastic Ball Grid Array (PBGA)	256 - 420
Enhanced Ball Grid Array (EBGA)	352 - 896
Flip Chip Ball Grid Array (FC-BGA)	1089 - 2116

SOP

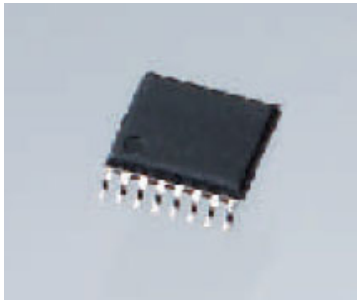

QFP

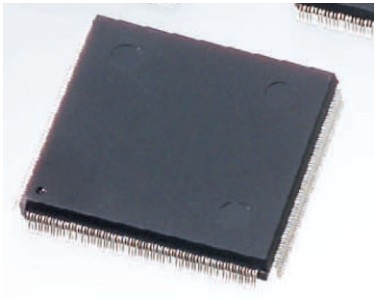

PBGA

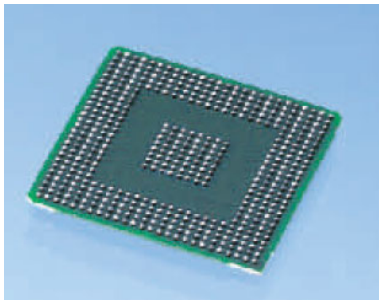

FC-BGA

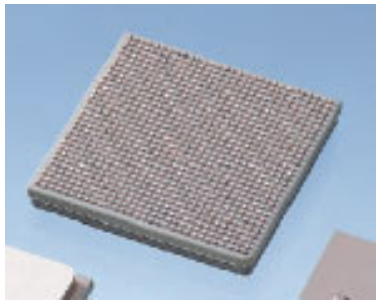

[Package Images - Fujitsu]

IC Package Examples

- Wirebonding is most common die attach method
- Flip-chip packaging allows for more efficient heat removal
- 2D solder ball array on chip allows for more signals and lower signal and supply impedance

Standard Wirebond Package

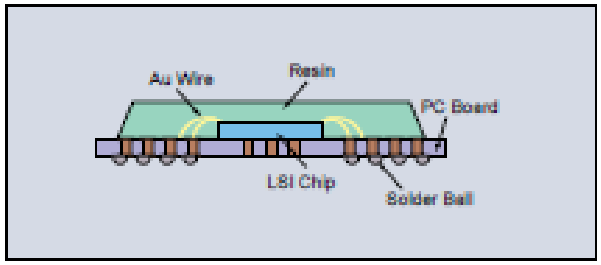

Flip-Chip/Wirebond Package

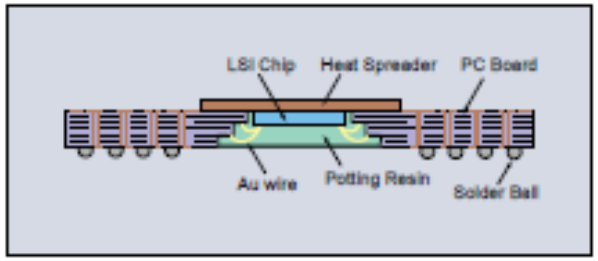

Flip-Chip/Solder Ball Package

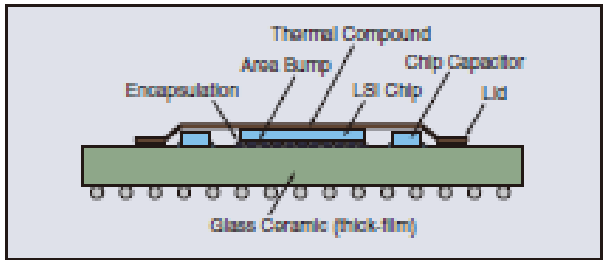

[Package Images - Fujitsu]

IC Package Model

Bondwires
- L ~ 1nH/mm
- Mutual L "K"
- C_{couple} ~ 20fF/mm

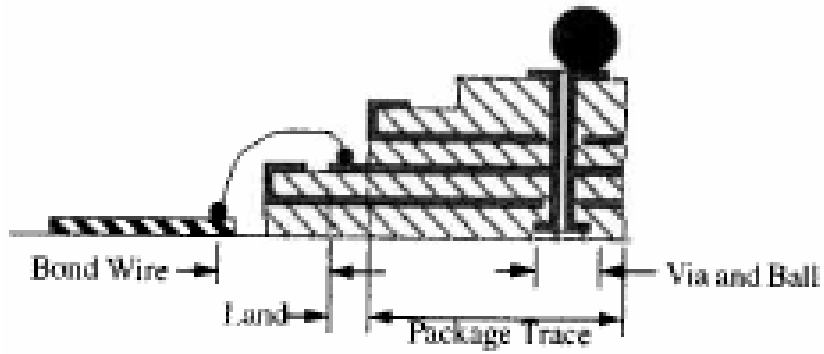

Package Trace
- L ~ 0.7-1nH/mm
- Mutual L "K"
- C_{layer} ~ 80-90fF/mm
- C_{couple} ~ 40fF/mm

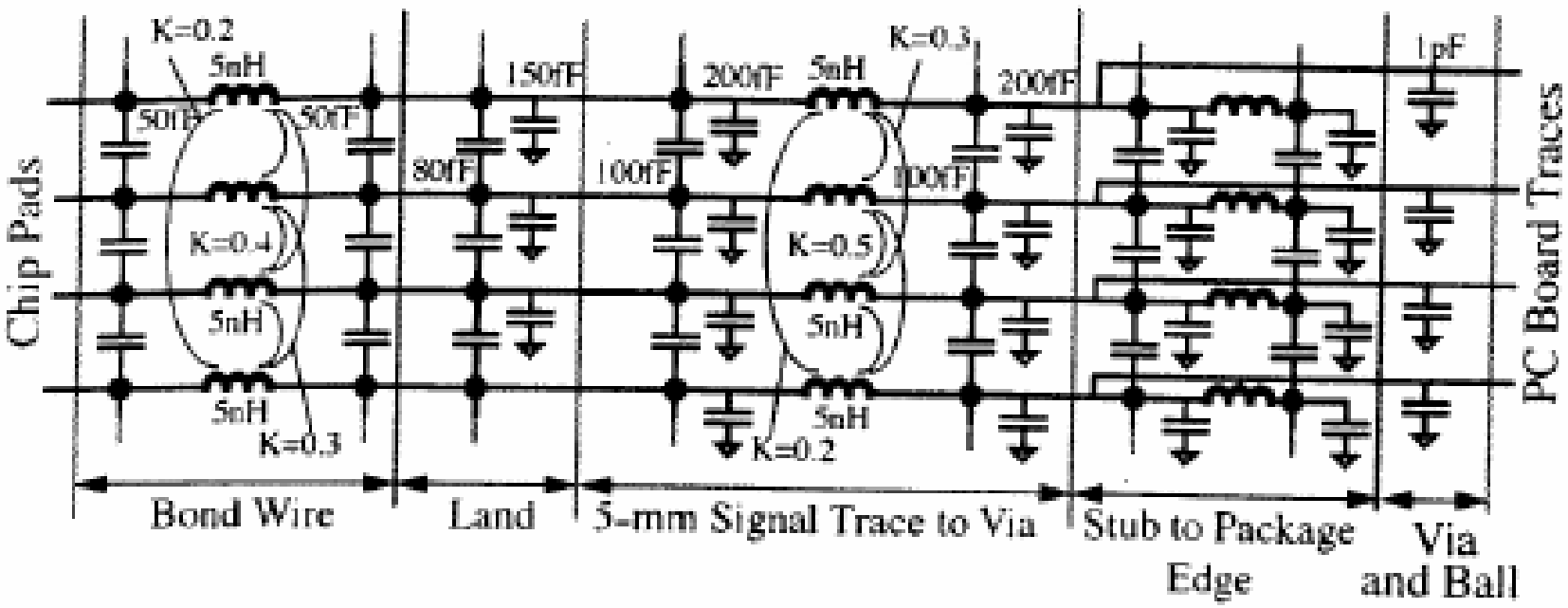

[Dally]

IC Package Model Comparisons

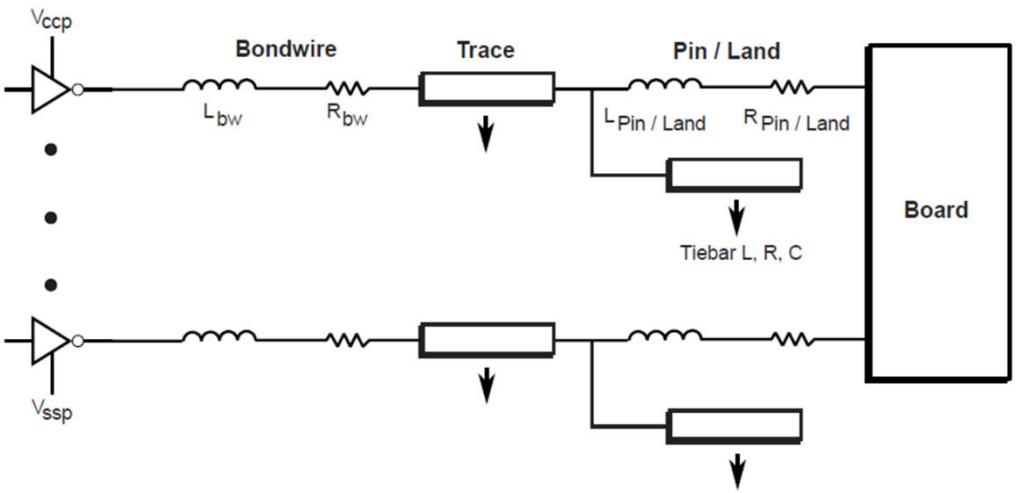

[Intel]

- FCB packaging allows for much less chip interface impedance

Electrical Parameter	Wirebond Package Type			Flip-chip Package Type	
	CPGA	PPGA	H-PBGA	OLGA	FC-PGA
Bondwire/Die bump R (mohms)	126 - 165	136 - 188	114 - 158	2	0.06
Bondwire/Die bumpL (nH)	2.3 - 4.1	2.5 - 4.6	2.1 - 4.1	0.02	0.013
Trace R (mohms/cm)	1200	66	66	500	120
Trace L (nH/cm)	4.32	3.42	3.42	3.07	2.329
Trace C (pF/cm)	2.47	1.53	1.53	1.66	1.707
Trace Z_0 (ohms)	42	47	47	43	38.5
Pin/Land R (mohms)	20	20	0	8	20
Pin/Land L (nH)	4.5	4.5	4.0	0.75	2.9
Plating Trace R (mohms/cm)	1200	66	66	N/A	N/A
Plating Trace L (nH/cm)	4.32	3.42	3.42	N/A	N/A
Plating Trace C (pF/cm)	2.47	1.53	1.53	N/A	N/A
Plating Trace Z_0 (ohms)	42	47	47	N/A	N/A
Trace Length Range (mm)	8.83 - 26.25	6.60 - 42.64	4.41 - 22.24	3.0 - 18.0	10.0 - 42.6
Plating Trace Length Range (mm)	1.91 - 10.50	1.91 - 16.46	0.930 - 8.03	N/A	N/A

Printed Circuit Boards

- Components soldered on top (and bottom)
- Typical boards have 4-8 signal layers and an equal number of power and ground planes
- Backplanes can have over 30 layers

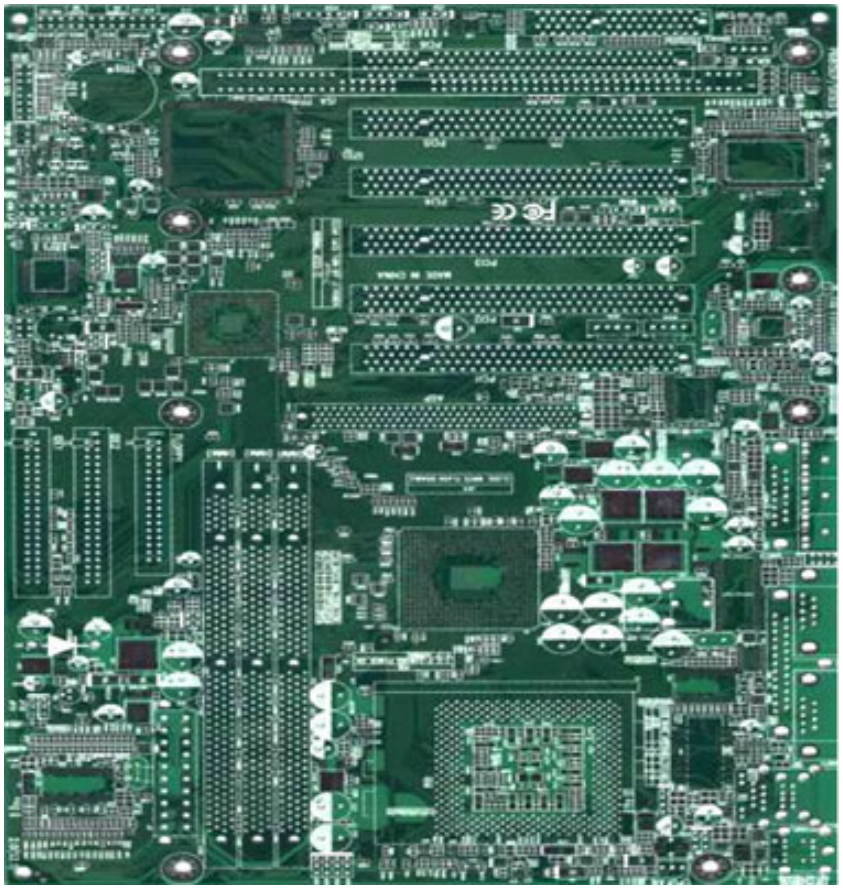

PCB Stackup

- Signals typically on top and bottom layers
- GND/Power plane pairs and signal layer pairs alternate in board interior
- Typical copper trace thickness
  - "0.5oz" (17.5um) for signal layers
  - "1oz" (35um) for power planes

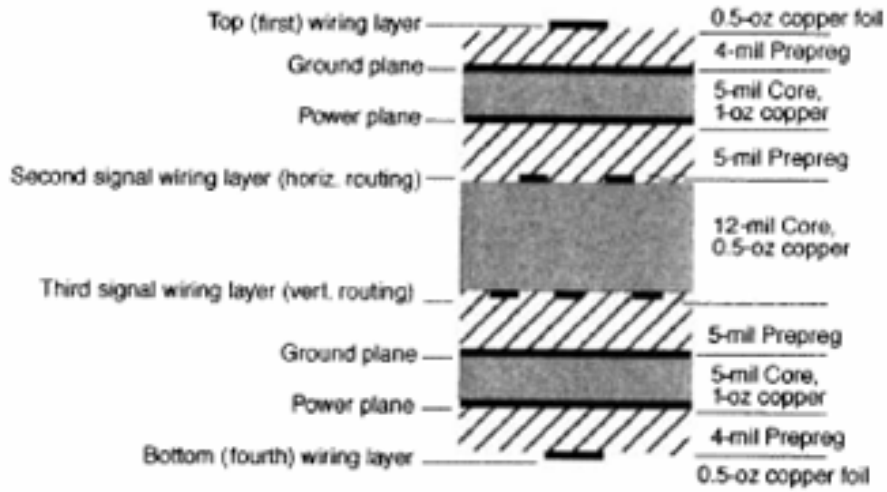

[Dally]

Connectors

- Connectors are used to transfer signals from board-to-board
- Typical differential pair density between 16-32 pairs/10mm

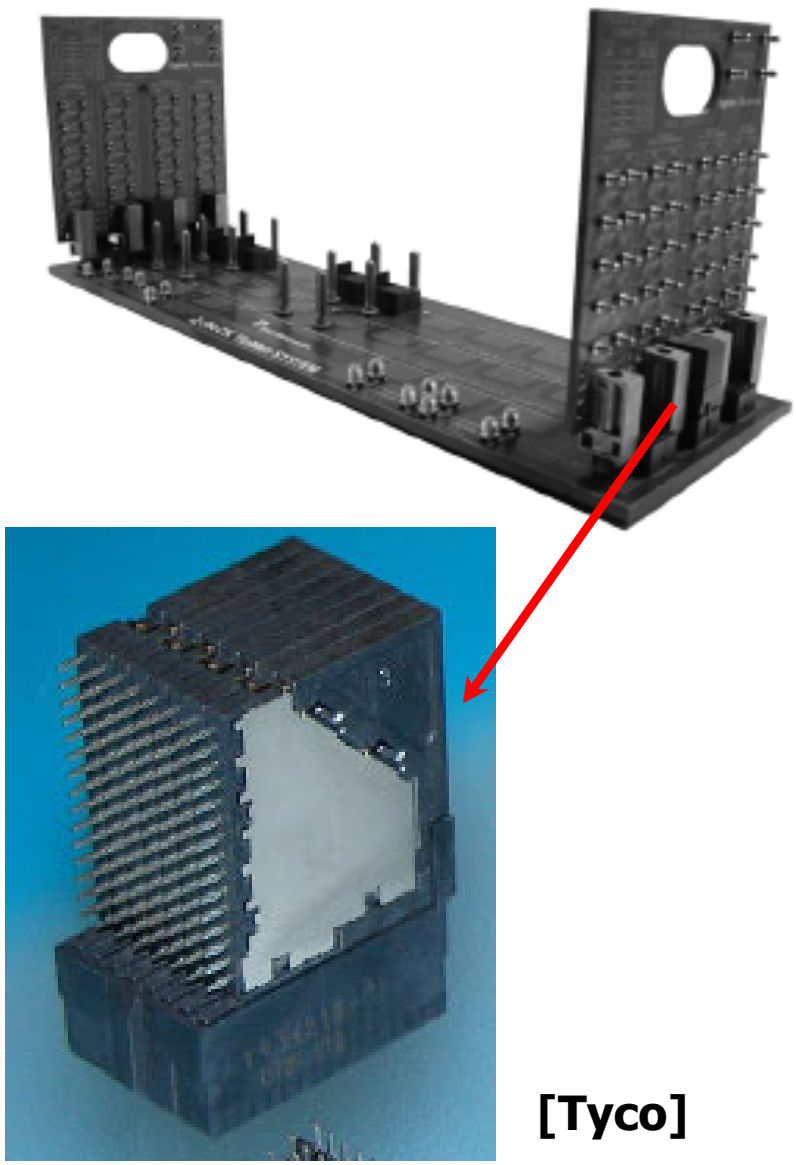

[Tyco]

Connectors

- Important to maintain proper differential impedance through connector
- Crosstalk can be an issue in the connectors

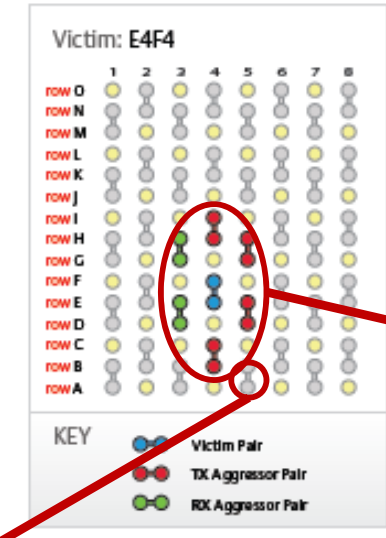

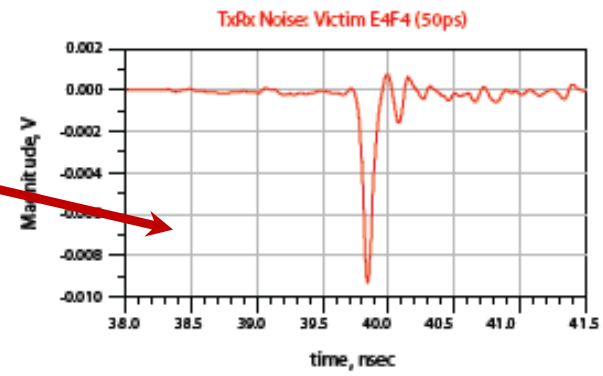

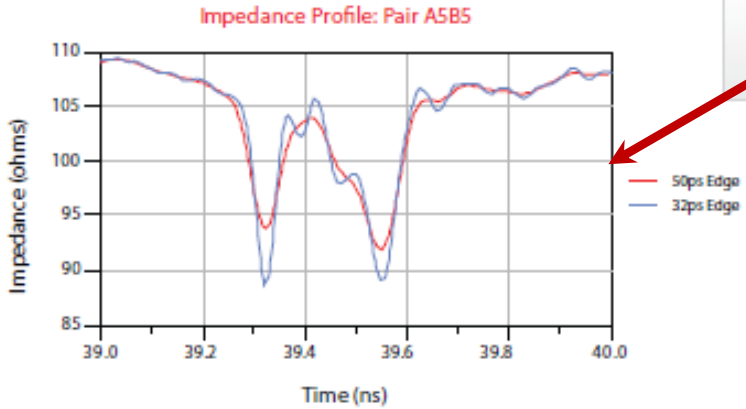

TX/RX Noise % (Victim E4F4)	
Edge Rate	Noise
50ps	1.9 %
100ps	1.1 %

[Tyco]

Vias

- Used to connect PCB layers
- Made by drilling a hole through the board which is plated with copper
  - Pads connect to signal layers/traces
  - Clearance holes avoid power planes

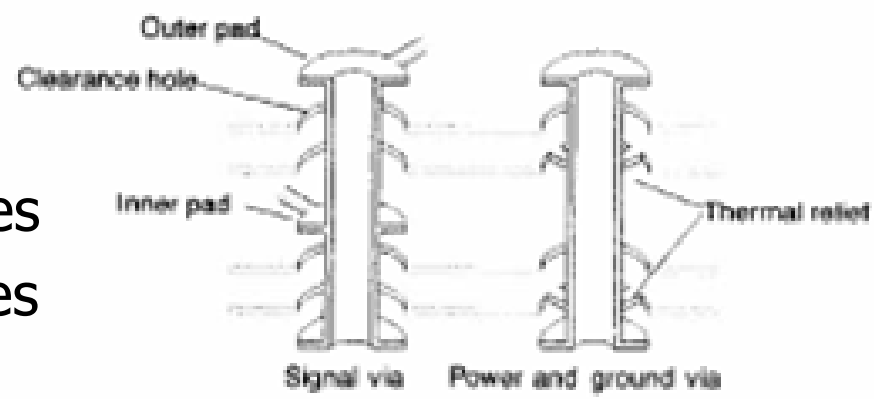

[Dally]

- Expensive in terms of signal density and integrity
  - Consume multiple trace tracks
  - Typically lower impedance and create "stubs"

Impact of Via Stubs at Connectors

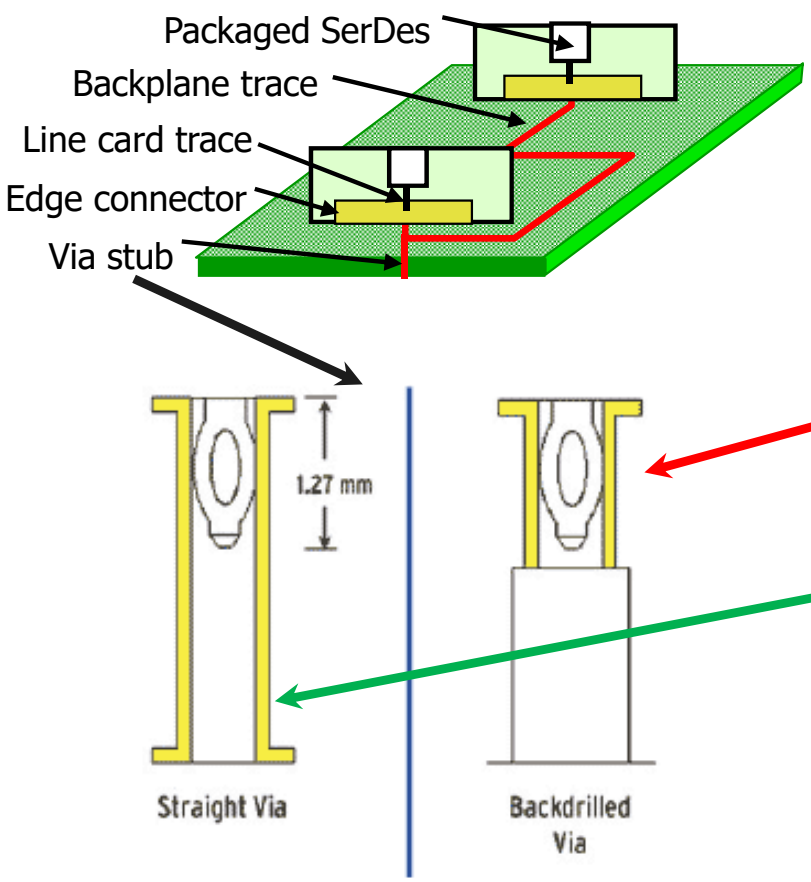

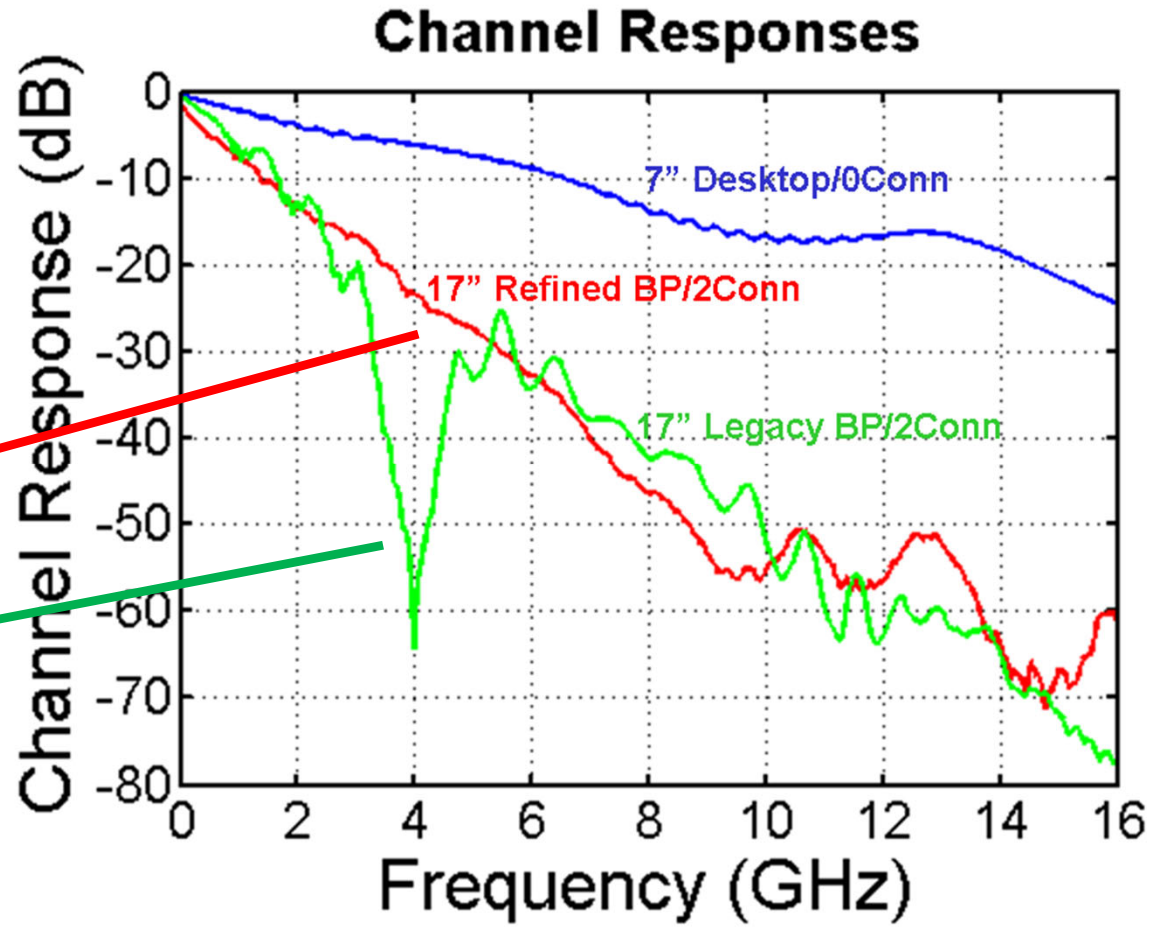

- Legacy BP has default straight vias
  - Creates severe nulls which kills signal integrity
- Refined BP has expensive backdrilled vias

PCB Trace Configurations

- Microstrips are signal traces on PCB outer surfaces
  - Trace is not enclosed and susceptible to cross-talk
- Striplines are sandwiched between two parallel ground planes
  - Has increased isolation

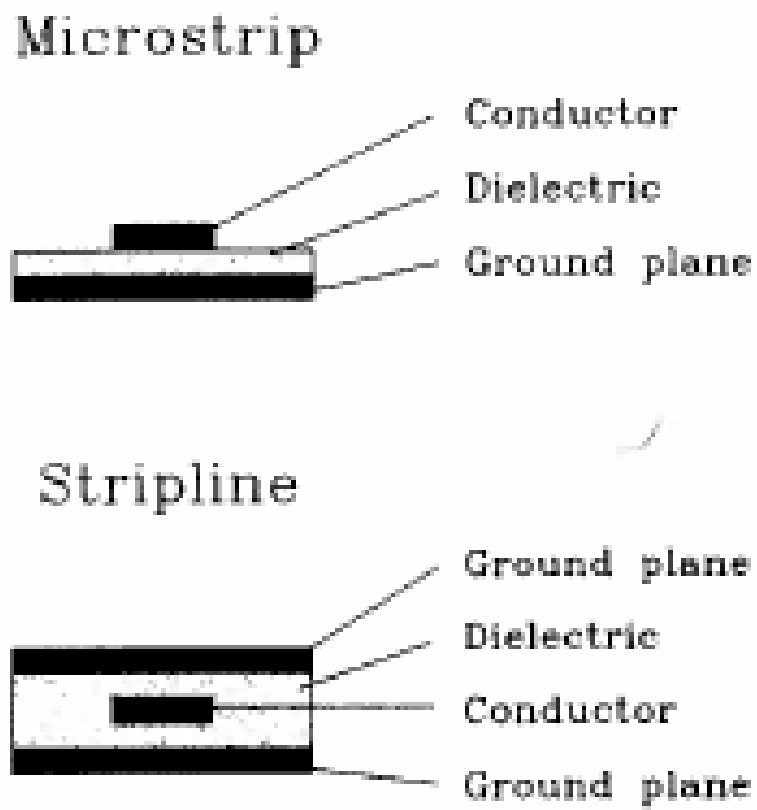

[Johnson]

Wire Models

- Resistance
- Capacitance
- Inductance
- Transmission line theory

Wire Resistance

- Wire resistance is determined by material resistivity, ρ, and geometry
- Causes signal loss and propagation delay

$$R = \frac{\rho l}{A} = \frac{\rho l}{wh}$$

$$R = \frac{\rho l}{A} = \frac{\rho l}{\pi r^2}$$

TABLE 3-1 **Resistivity of Common Conductive Materials**

Material	Symbol	ρ(Ω-m)
Silver	Ag	1.6×10^{-8}
Copper	Cu	1.7×10^{-8}
Gold	Au	2.2×10^{-8}
Aluminum	Al	2.7×10^{-8}
Tungsten	W	5.5×10^{-8}

[Dally]

Wire Capacitance

- Wire capacitance is determined by dielectric permittivity, ε, and geometry
- Best to use lowest ε_r
  - Lower capacitance
  - Higher propagation velocity

TABLE 3-2 Permittivity of Some Typical Insulators

Material	ε_r
Air	1
Teflon	2
Polyimide	3
Silicon dioxide	3.9
Glass-epoxy (PC board)	4
Alumina	10
Silicon	11.7

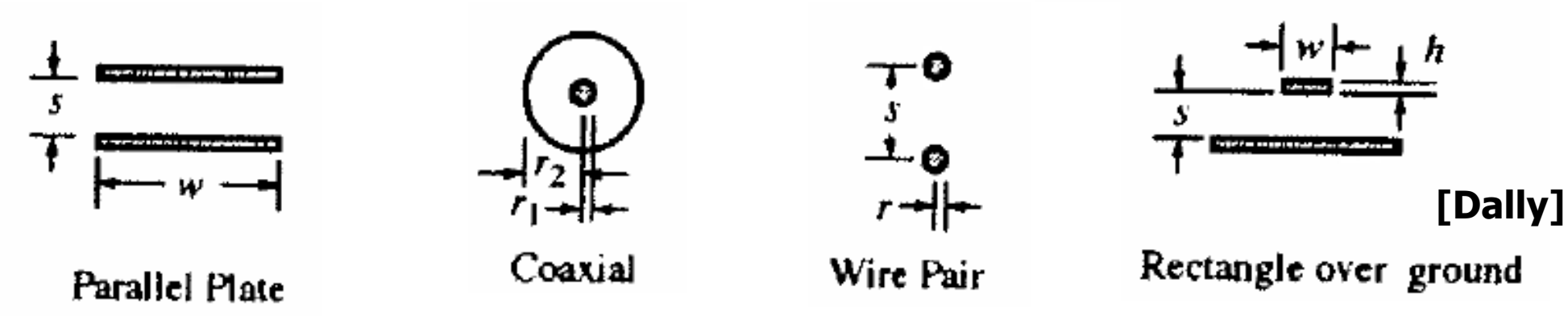

[Dally]

$$C = \frac{w\varepsilon}{s}$$

$$C = \frac{2\pi\varepsilon}{\log(r_2/r_1)}$$

$$C = \frac{\pi\varepsilon}{\log(s/r)}$$

$$C = \frac{w\varepsilon}{s} + \frac{2\pi\varepsilon}{\log(4s/h)}$$

Wire Inductance

- Wire inductance is determined by material permeability, μ, and closed-loop geometry

- For wire in homogeneous medium

$$CL = \varepsilon\mu$$

- Generally $\mu = \mu_0 = 4\pi \times 10^{-7}\,\mathrm{H/m}$

Wire Models

- Model Types
  - Ideal
  - Lumped C, R, L
  - RC transmission line
  - LC transmission line
  - RLGC transmission line

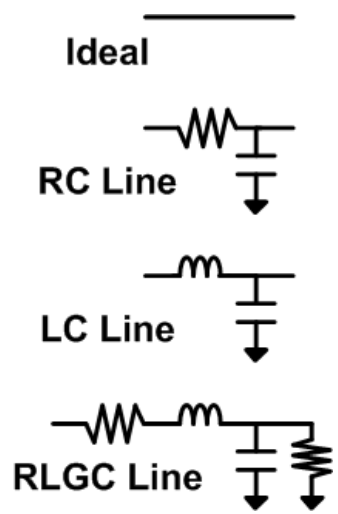

- Condition for LC or RLGC model (vs RC)

$$f_0 \geq \frac{R}{2\pi L}$$

Wire	R	L	C	>f (LC wire)
AWG24 Twisted Pair	0.08Ω/m	400nH/m	40pF/m	32kHz
PCB Trace	5Ω/m	300nH/m	100pF/m	2.7MHz
On-Chip Min. Width M6 (0.18μm CMOS node)	40kΩ/m	4μH/m	300pF/m	1.6GHz

RLGC Transmission Line Model

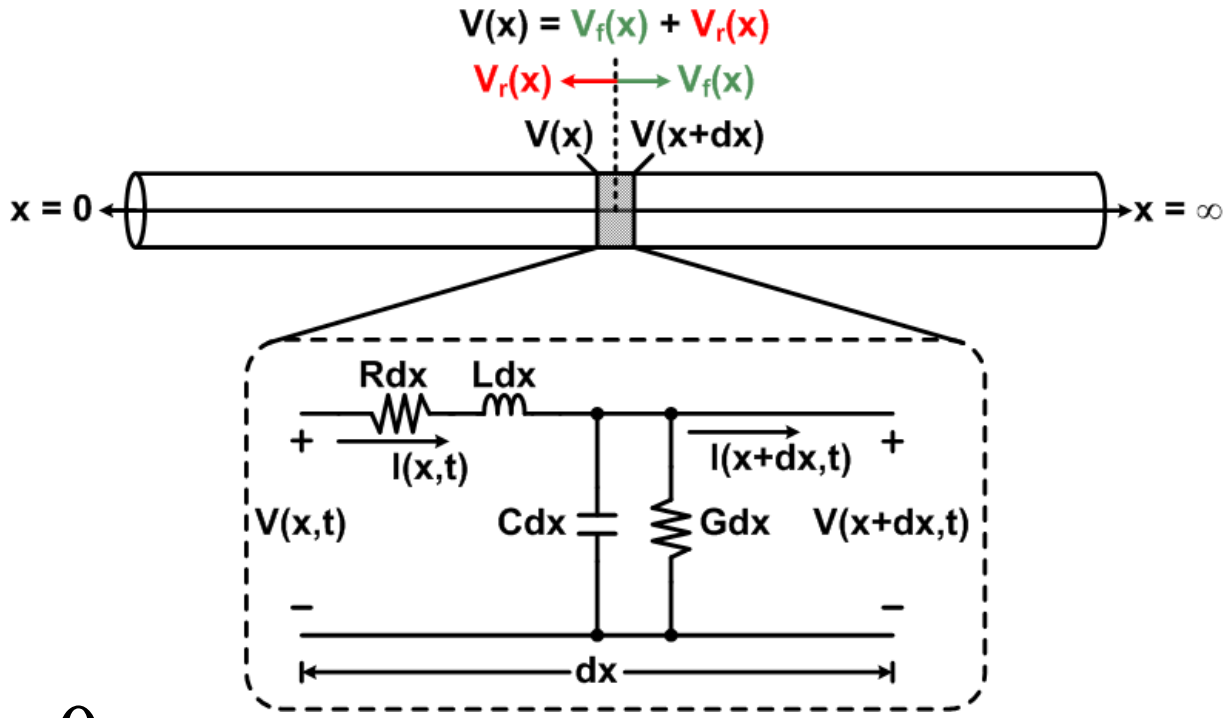

As $dx \to 0$

$$\frac{\partial V(x,t)}{\partial x} = -RI(x,t) - L\frac{\partial I(x,t)}{\partial t} \qquad (1)$$

$$\frac{\partial I(x,t)}{\partial x} = -GV(x,t) - C\frac{\partial V(x,t)}{\partial t} \qquad (2)$$

General Transmission Line Equations

Time-Harmonic Transmission Line Eqs.

- Assuming a traveling sinusoidal wave with angular frequency, ω

$$\frac{dV(x)}{dx} = -(R + j\omega L)I(x) \quad (3)$$

$$\frac{dI(x)}{dx} = -(G + j\omega C)V(x) \quad (4)$$

- Differentiating (3) and plugging in (4) (and vice versa)

$$\left.\begin{aligned} \frac{d^2V(x)}{dx^2} &= \gamma^2 V(x) \quad (5) \\ \frac{d^2I(x)}{dx^2} &= \gamma^2 I(x) \quad (6) \end{aligned}\right\} \textbf{Time-Harmonic Transmission Line Equations}$$

- where γ is the **propagation constant**

$$\boxed{\gamma = \alpha + j\beta = \sqrt{(R + j\omega L)(G + j\omega C)} \quad (\mathrm{m}^{-1})}$$

Transmission Line Propagation Constant

- Solutions to the Time-Harmonic Line Equations:

$$V(x) = V_f(x) + V_r(x) = V_{f0}e^{-\gamma x} + V_{r0}e^{\gamma x}$$

$$I(x) = I_f(x) + I_r(x) = I_{f0}e^{-\gamma x} + I_{r0}e^{\gamma x}$$

where $\boxed{\gamma = \alpha + j\beta = \sqrt{(R + j\omega L)(G + j\omega C)} \quad (\mathrm{m}^{-1})}$

- What does the propagation constant tell us?
  - Real part (α) determines attenuation/distance (Np/m)
  - Imaginary part (β) determines phase shift/distance (rad/m)
  - **Signal phase velocity**

$$\boxed{\upsilon = \omega/\beta \quad (\mathrm{m/s})}$$

Transmission Line Impedance, Z_0

- For an infinitely long line, the voltage/current ratio is Z_0
- From time-harmonic transmission line eqs. (3) and (4)

$$\boxed{Z_0 = \frac{V(x)}{I(x)} = \sqrt{\frac{R + j\omega L}{G + j\omega C}} \quad (\Omega)}$$

- Driving a line terminated by Z_0 is the same as driving an infinitely long line

[**Dally**]

Lossless LC Transmission Lines

- If Rdx=Gdx=0

$$\gamma = \alpha + j\beta = j\omega\sqrt{LC}$$

$$\alpha = 0 \Rightarrow \textbf{No Loss!}$$

$$\beta = \omega\sqrt{LC}$$

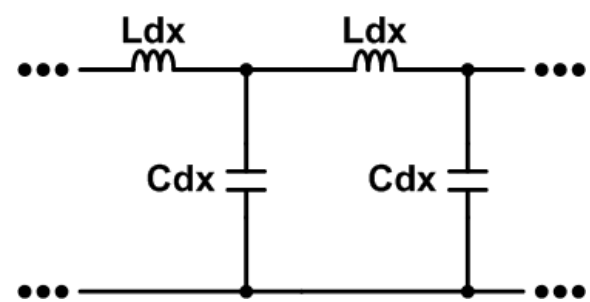

- Waves propagate w/o distortion
  - Velocity and impedance independent of frequency
  - Impedance is purely real

$$\boxed{\begin{aligned} \upsilon &= \frac{\omega}{\beta} = \frac{1}{\sqrt{LC}} \\ Z_0 &= \sqrt{\frac{L}{C}} \end{aligned}}$$

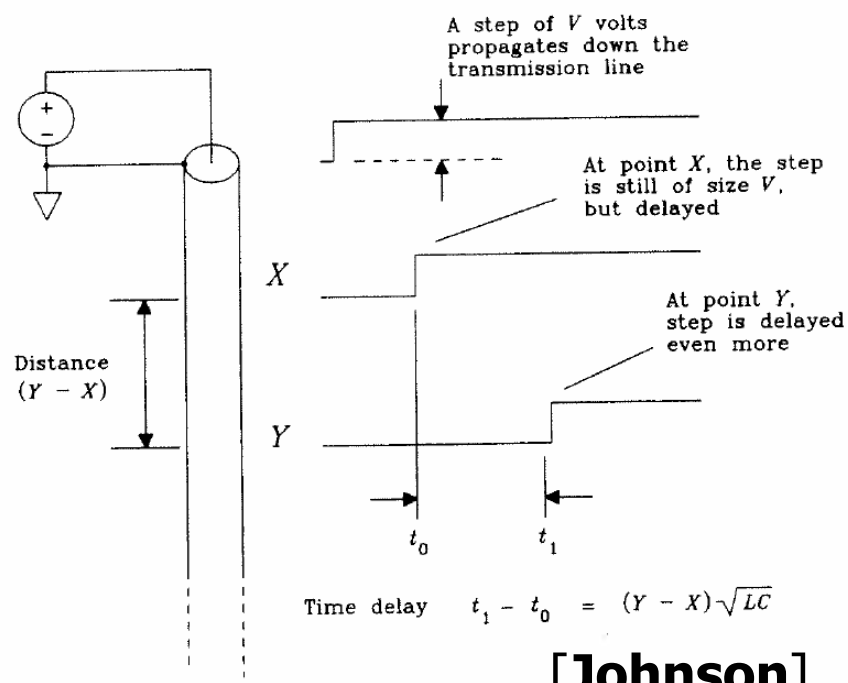

[**Johnson**]

Low-Loss LRC Transmission Lines

- If $R/\omega L$ and $G/\omega C << 1$
- Behave similar to ideal LC transmission line, but …
  - Experience resistive and dielectric loss
  - Frequency dependent propagation velocity results in dispersion
    - Fast step, followed by slow DC tail

$$\gamma = \alpha + j\beta = \sqrt{(R + j\omega L)(G + j\omega C)}$$

$$\cong j\omega\sqrt{LC}\left(1 - j\frac{RC + GL}{\omega LC}\right)^{\frac{1}{2}}$$

$$\cong \frac{R}{2Z_0} + \frac{GZ_0}{2} + j\omega\sqrt{LC}\left[1 + \frac{1}{8}\left(\frac{R}{\omega L}\right)^2 + \frac{1}{8}\left(\frac{G}{\omega C}\right)^2\right]$$

$$= \alpha_R + \alpha_D + j\beta$$

$$\boxed{\begin{aligned} \alpha_R &\cong \frac{R}{2Z_0} \\ \alpha_D &\cong \frac{GZ_0}{2} \end{aligned}}$$

Resistive Loss

Dielectric Loss

$$\beta \cong \omega\sqrt{LC}\left[1 + \frac{1}{8}\left(\frac{R}{\omega L}\right)^2 + \frac{1}{8}\left(\frac{G}{\omega C}\right)^2\right]$$

$$\boxed{\upsilon \cong \left(\sqrt{LC}\left[1 + \frac{1}{8}\left(\frac{R}{\omega L}\right)^2 + \frac{1}{8}\left(\frac{G}{\omega C}\right)^2\right]\right)^{-1}}$$

Frequency-Dependent Loss Mechanisms

- The resistive (α_R) and dielectric (α_D) loss terms cause a signal propagating down a transmission-line to become attenuated with distance

$$\frac{V(x)}{V(0)} = e^{-(\alpha_R + \alpha_D)x}$$

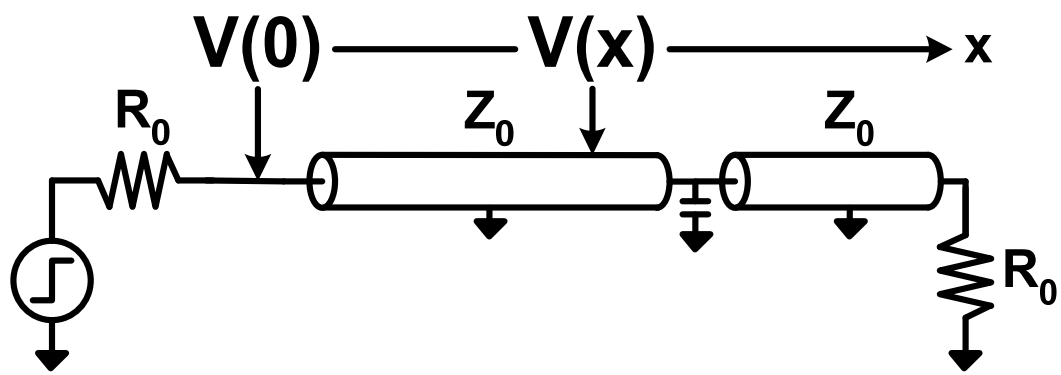

- Resistive loss term is due to conductor skin effect
- Dielectric loss term is due to dielectric absorption
- Both terms increase with frequency, although at different rates

Skin Effect (Resistive Loss)

- High-frequency current density falls off exponentially from conductor surface
- Skin depth, δ, is where current falls by e^{-1} relative to full conductor
  - Decreases proportional to sqrt(frequency)
- Relevant at critical frequency f_s where skin depth equals half conductor height (or radius)
  - Above f_s resistance/loss increases proportional to sqrt(frequency)

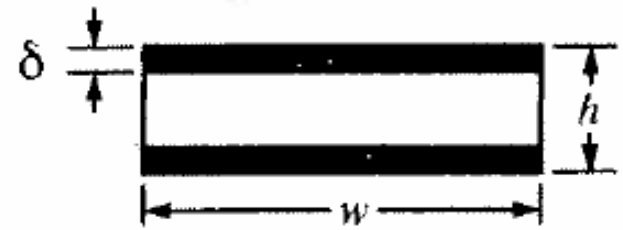

[**Dally**]

$$J = e^{-\frac{d}{\delta}} \qquad \delta = (\pi f \mu \sigma)^{-\frac{1}{2}}$$

For rectangular conductor:

$$f_s = \frac{\rho}{\pi\mu\left(\frac{h}{2}\right)^2}$$

$$R(f) = R_{DC}\left(\frac{f}{f_s}\right)^{\frac{1}{2}}$$

$$\boxed{\alpha_R = \frac{R_{DC}}{2Z_0}\left(\frac{f}{f_s}\right)^{\frac{1}{2}}}$$

Skin Effect (Resistive Loss)

5-mil Stripguide

$R_{DC} = 7\,\Omega/m,\ f_s = 43MHz$

30 AWG Pair

$R_{DC} = 0.08\,\Omega/m,\ f_s = 67kHz$

$$\alpha_R = \frac{R_{DC}}{2Z_0}\left(\frac{f}{f_s}\right)^{\frac{1}{2}}$$

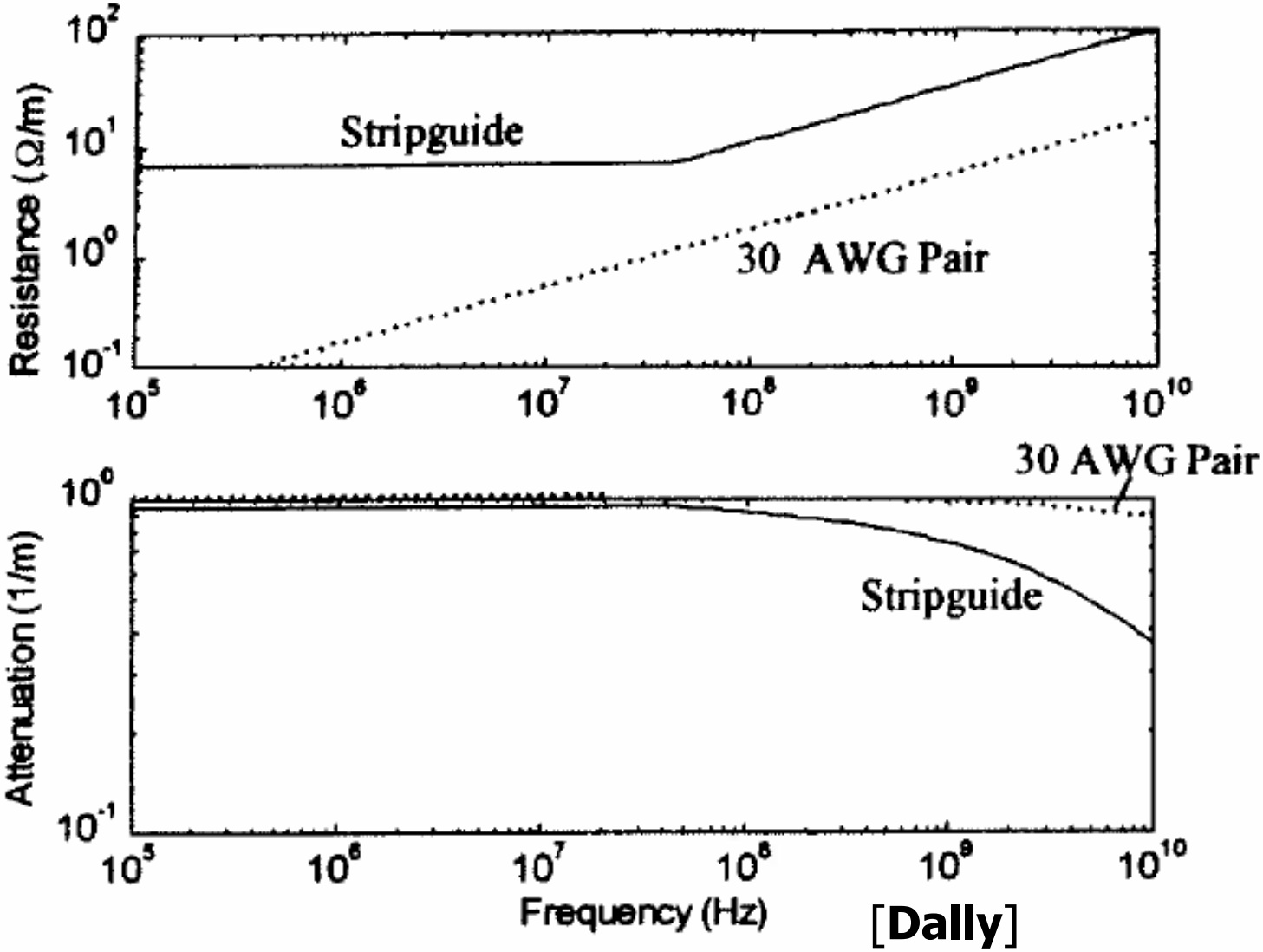

[**Dally**]

Dielectric Absorption (Loss)

- An alternating electric field causes dielectric atoms to rotate and absorb signal energy in the form of heat
- Dielectric loss is expressed in terms of the loss tangent
- Loss increases directly proportional to frequency

$$\tan \delta_D = \frac{G}{\omega C}$$

TABLE 3-4 **Electrical Properties of PC Board Dielectrics**

Material	ε_r	$\tan \delta_D$
Woven glass, epoxy resin ("FR-4")	4.7	0.035
Woven glass, polyimide resin	4.4	0.025
Woven glass, polyphenylene oxide resin (GETEK)	3.9	0.010
Woven glass, PTFE resin (Teflon)	2.55	0.005
Nonwoven glass, PTFE resin	2.25	0.001

[**Dally**]

$$\alpha_D = \frac{GZ_0}{2} = \frac{2\pi f C \tan \delta_D \sqrt{L/C}}{2}$$
$$= \pi f \tan \delta_D \sqrt{LC}$$

Total Wire Loss

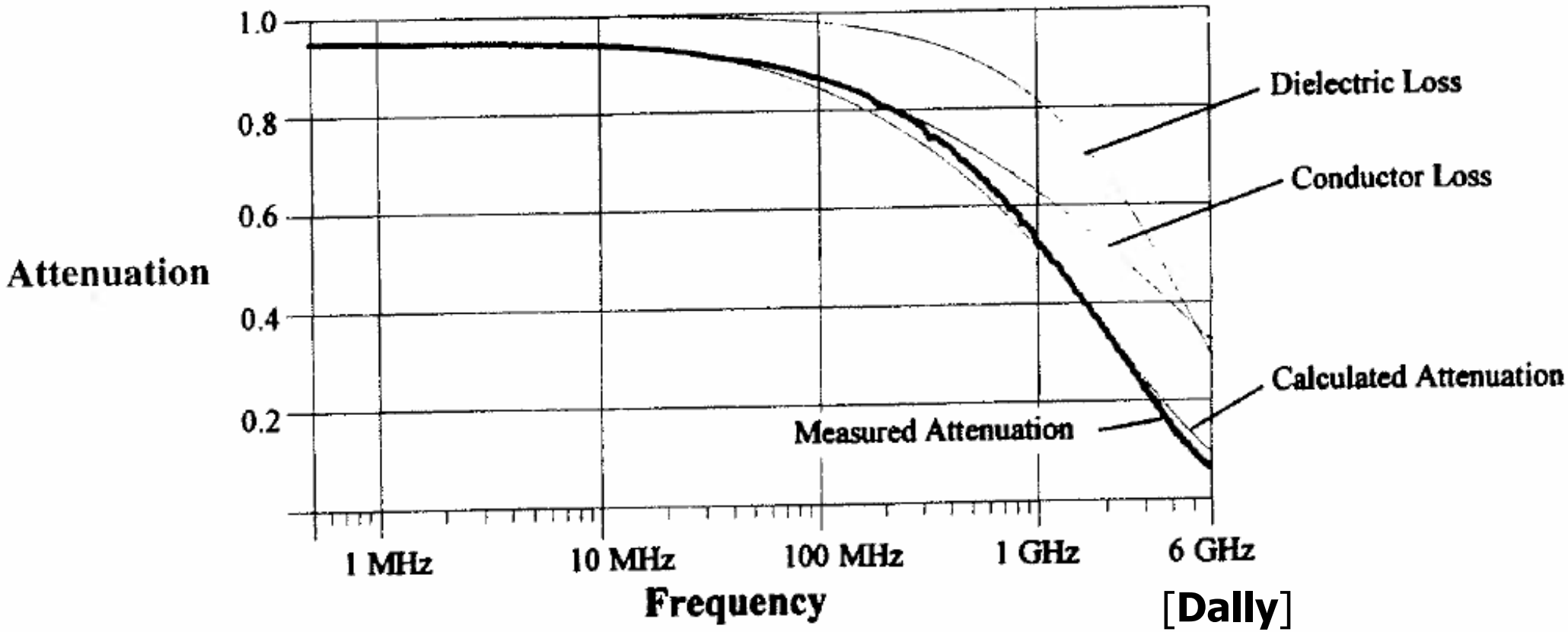

[**Dally**]

Advanced Board Dielectrics

[Samtec]

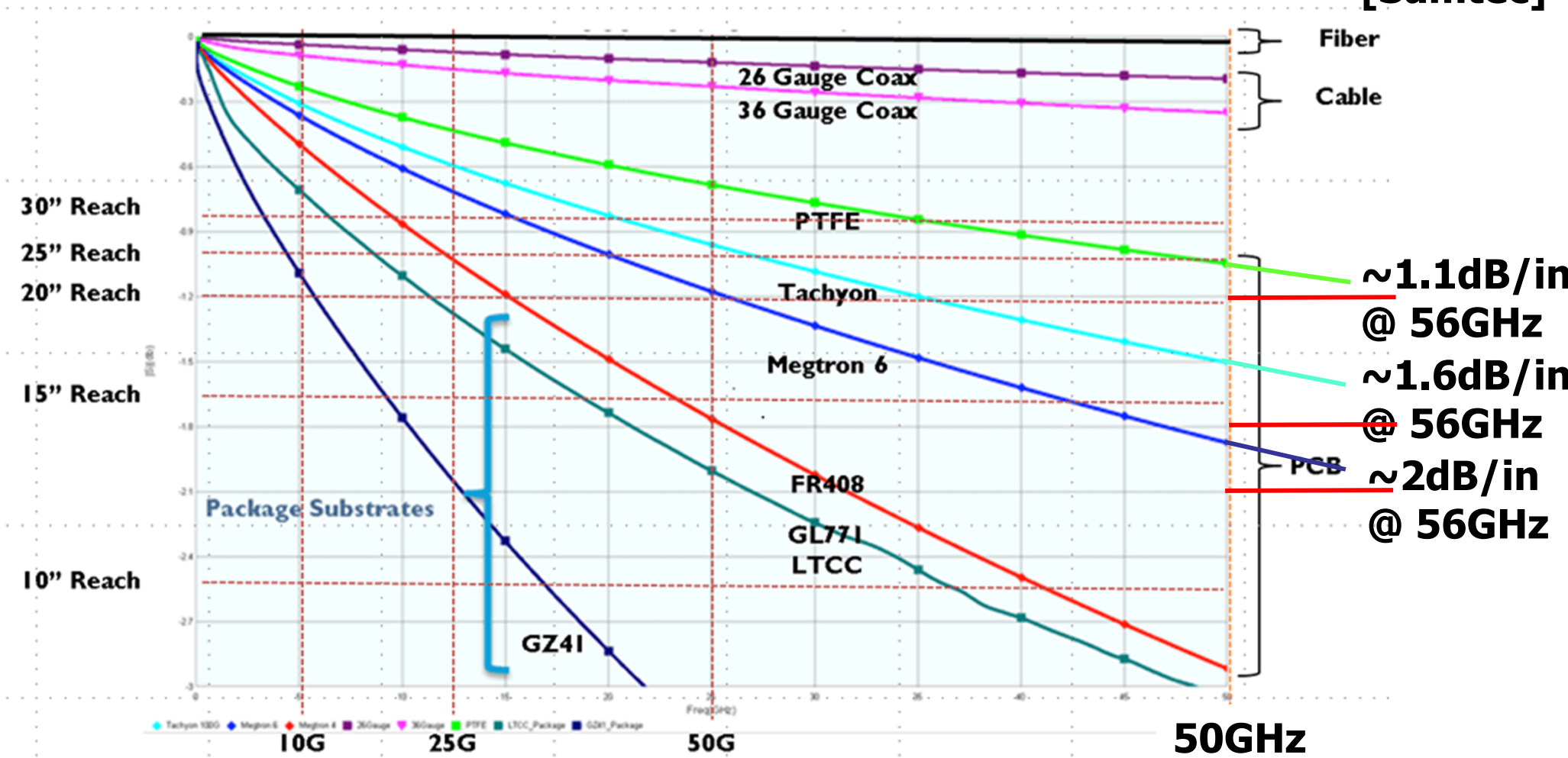

- Megtron 6 25dB loss is 12.5”
- Tachyon 25dB loss is 15.6”
- PTFE (Teflon) 25dB loss is 22.7”
- Cabled interconnects can support ~1.5m

Cabled Backplane

[Ghiasi IEEE802.3 2017]

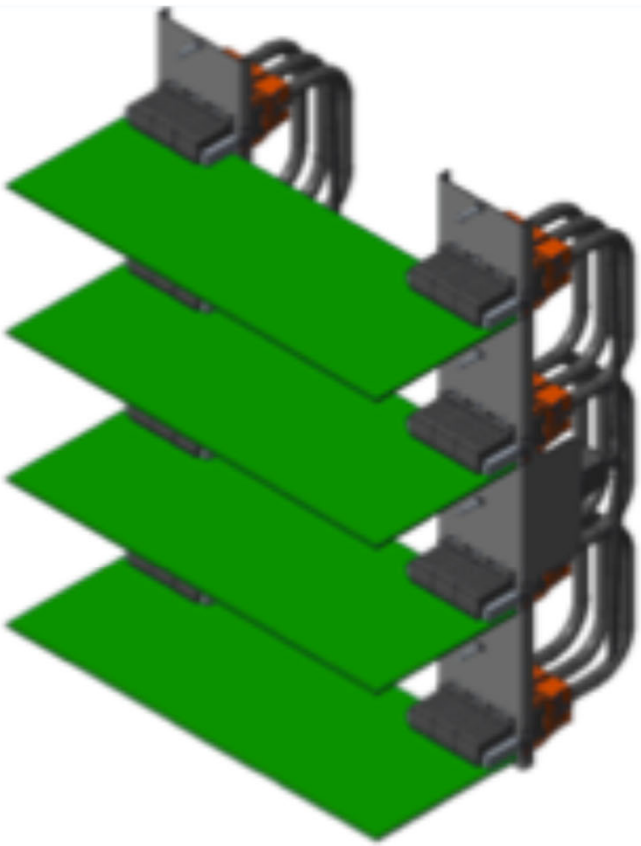

- Cabled backplane with short daughter cards can support ~1m distances at 224Gb/s

Reflections & Telegrapher's Eq.

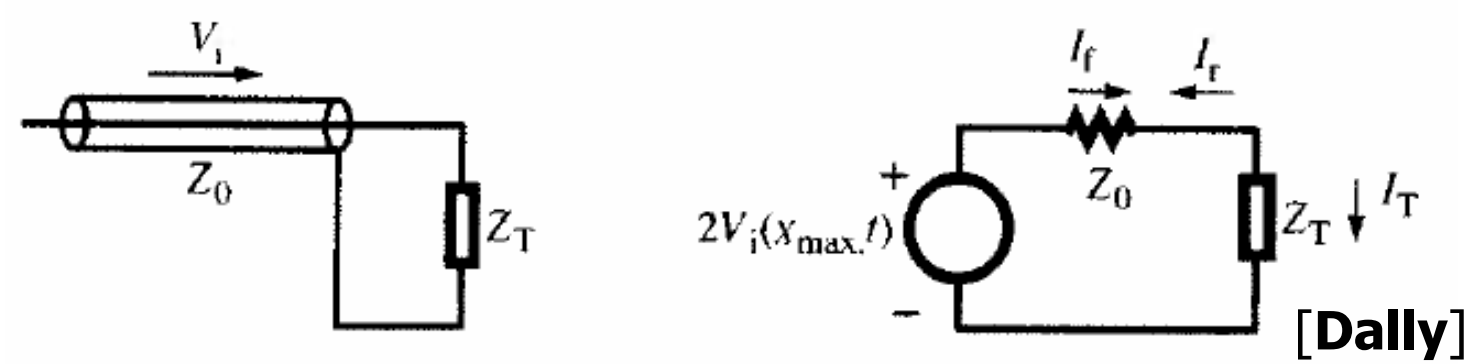

[**Dally**]

- With a Thevenin-equivalent model of the line:

Termination Current: $$I_T = \frac{2V_i}{Z_0 + Z_T}$$

- KCL at Termination:

$$I_f = \frac{V_i}{Z_0}, \quad I_r = I_f - I_T$$

$$I_r = \frac{V_i}{Z_0} - \frac{2V_i}{Z_T + Z_0}$$

$$I_r = \frac{V_i}{Z_0}\left(\frac{Z_T - Z_0}{Z_T + Z_0}\right)$$

Telegrapher's Equation or
Reflection Coefficient

$$\boxed{k_r = \frac{I_r}{I_f} = \frac{V_r}{V_i} = \frac{Z_T - Z_0}{Z_T + Z_0}}$$

Termination Examples - Ideal

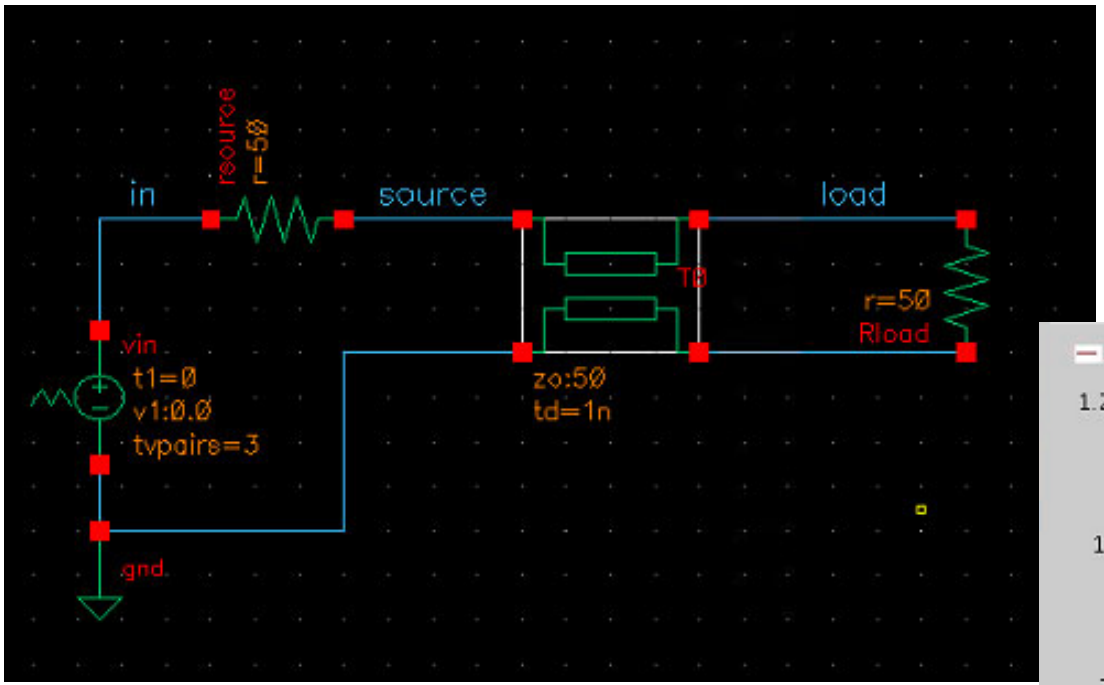

$R_S = 50\Omega$

$Z_0 = 50\Omega$, $t_d = 1ns$

$R_T = 50\Omega$

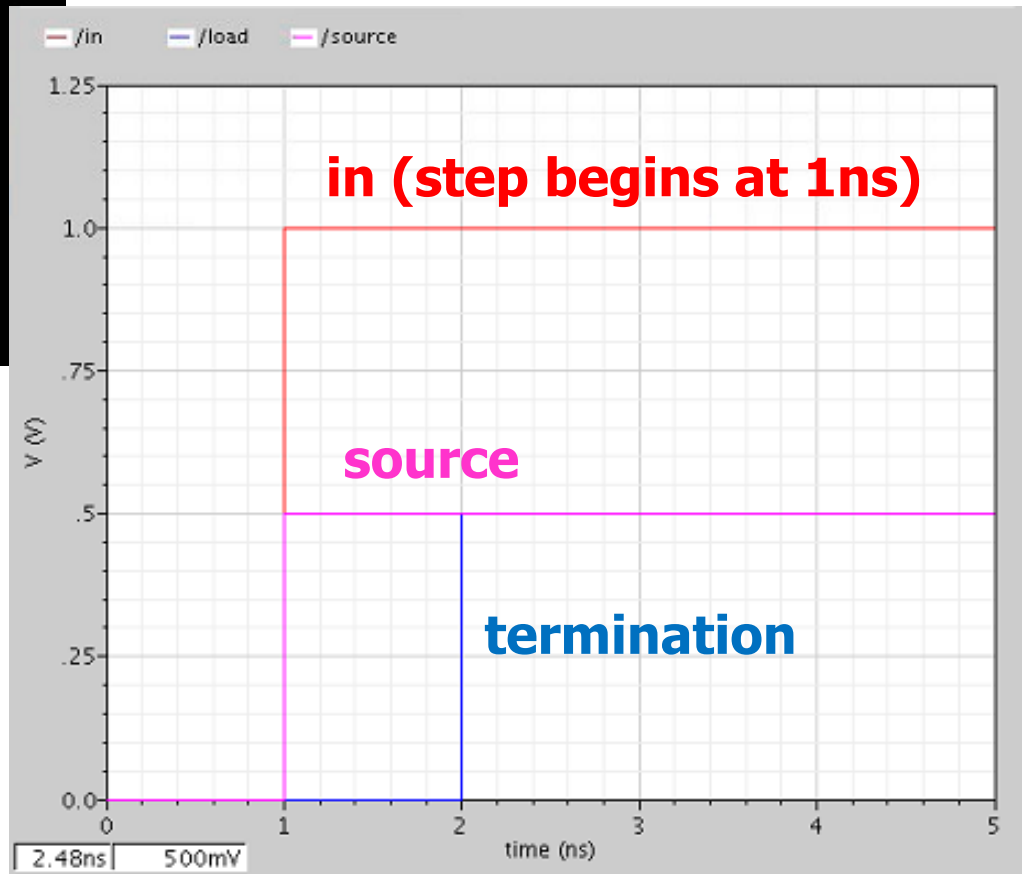

$$V_i = 1V\left(\frac{50}{50+50}\right) = 0.5V$$

$$k_{rT} = \frac{50-50}{50+50} = 0$$

$$k_{rS} = \frac{50-50}{50+50} = 0$$

Termination Examples - Open

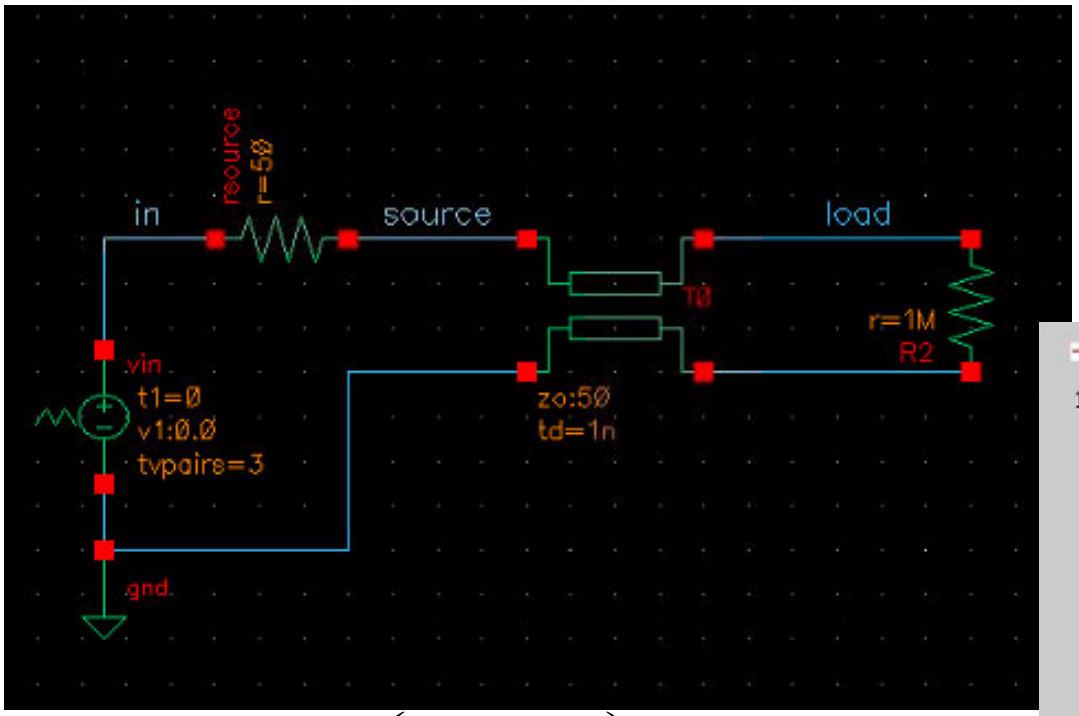

$R_S = 50\Omega$

$Z_0 = 50\Omega$, $t_d = 1ns$

$R_T \sim \infty$ (1MΩ)

$$V_i = 1V\left(\frac{50}{50+50}\right) = 0.5V$$

$$k_{rT} = \frac{\infty - 50}{\infty + 50} = +1$$

$$k_{rS} = \frac{50-50}{50+50} = 0$$

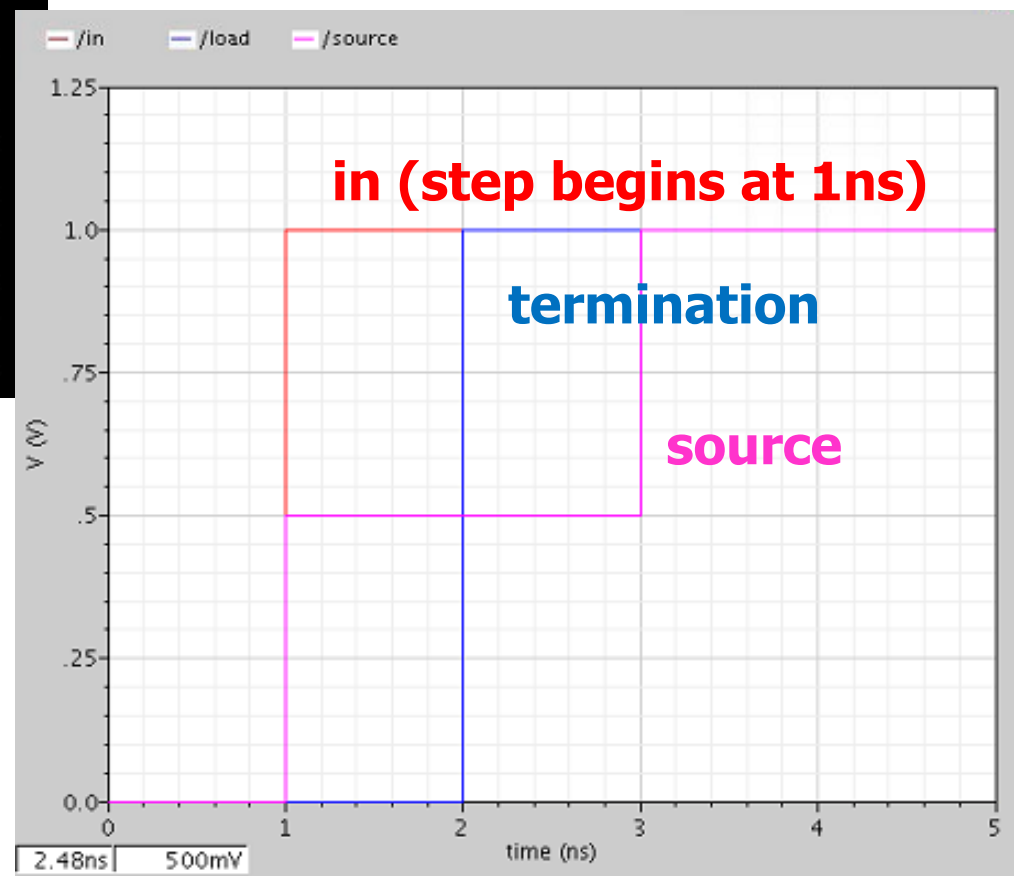

Termination Examples - Short

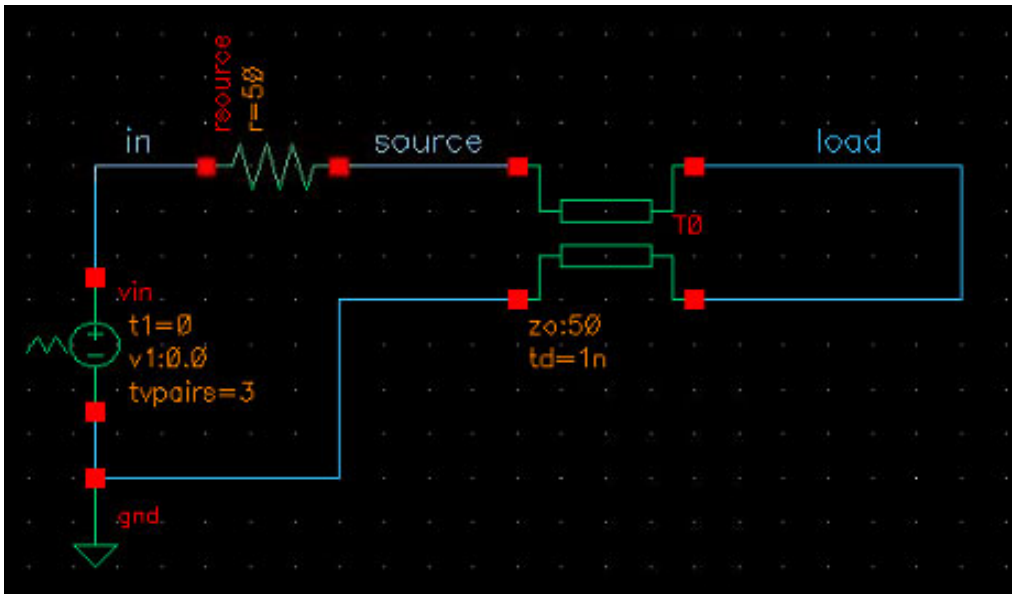

$R_S = 50\Omega$

$Z_0 = 50\Omega$, $t_d = 1ns$

$R_T = 0\Omega$

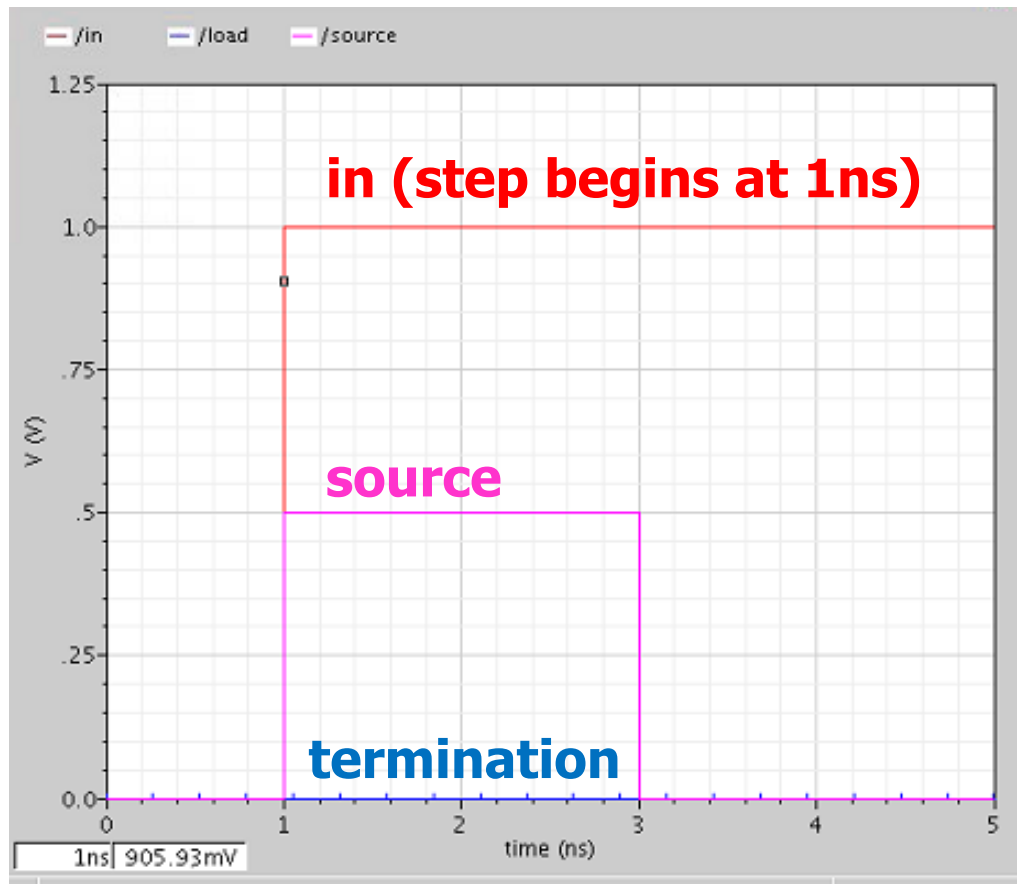

$$V_i = 1V\left(\frac{50}{50+50}\right) = 0.5V$$

$$k_{rT} = \frac{0-50}{0+50} = -1$$

$$k_{rS} = \frac{50-50}{50+50} = 0$$

Arbitrary Termination Example

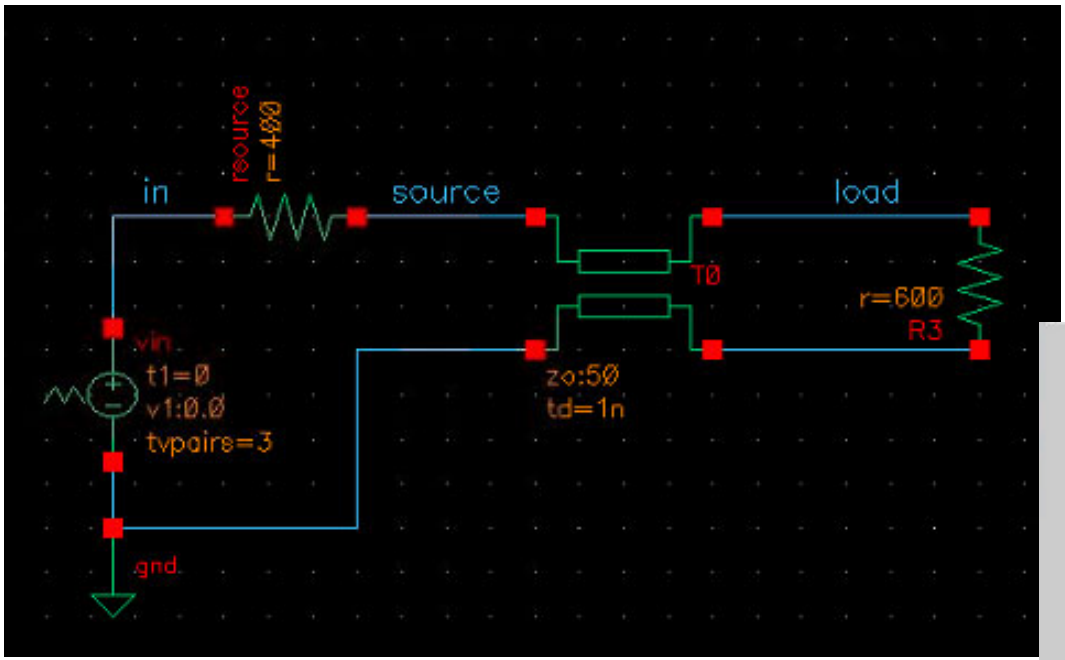

$R_S = 400\Omega$

$Z_0 = 50\Omega$, $t_d = 1ns$

$R_T = 600\Omega$

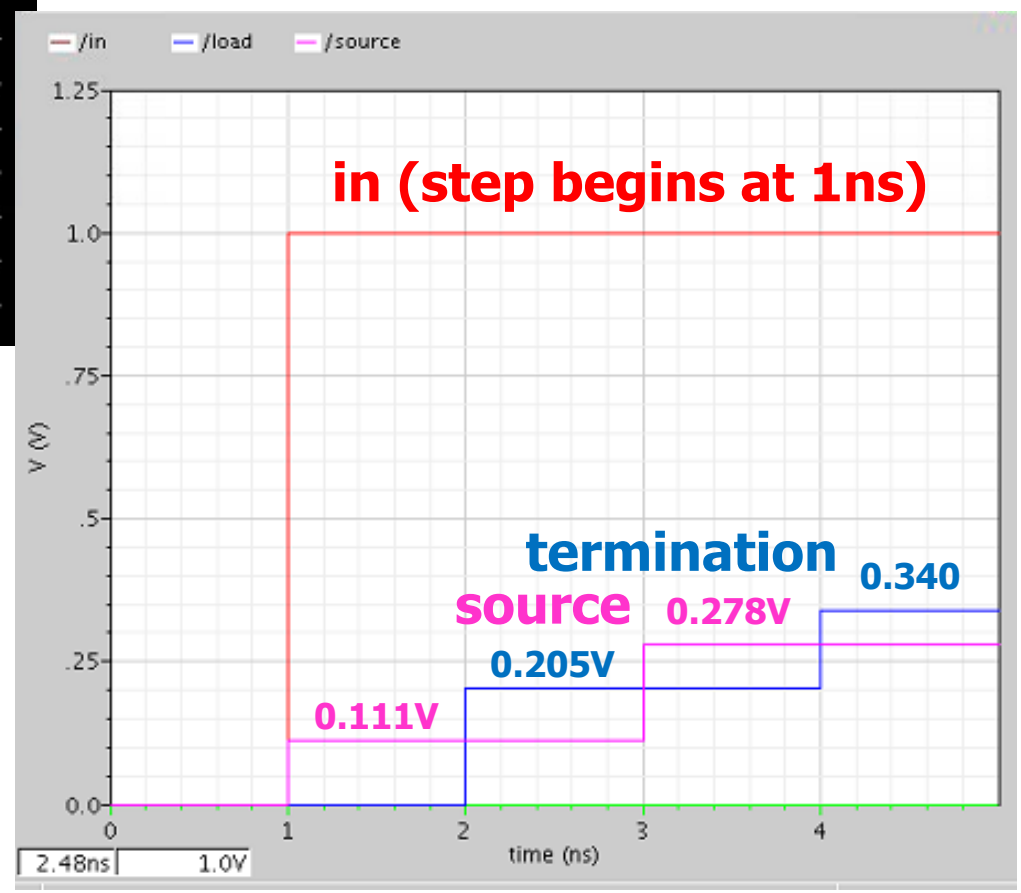

$$V_i = 1V\left(\frac{50}{400+50}\right) = 0.111V$$

$$k_{rT} = \frac{600-50}{600+50} = 0.846$$

$$k_{rS} = \frac{400-50}{400+50} = 0.778$$

Lattice Diagram

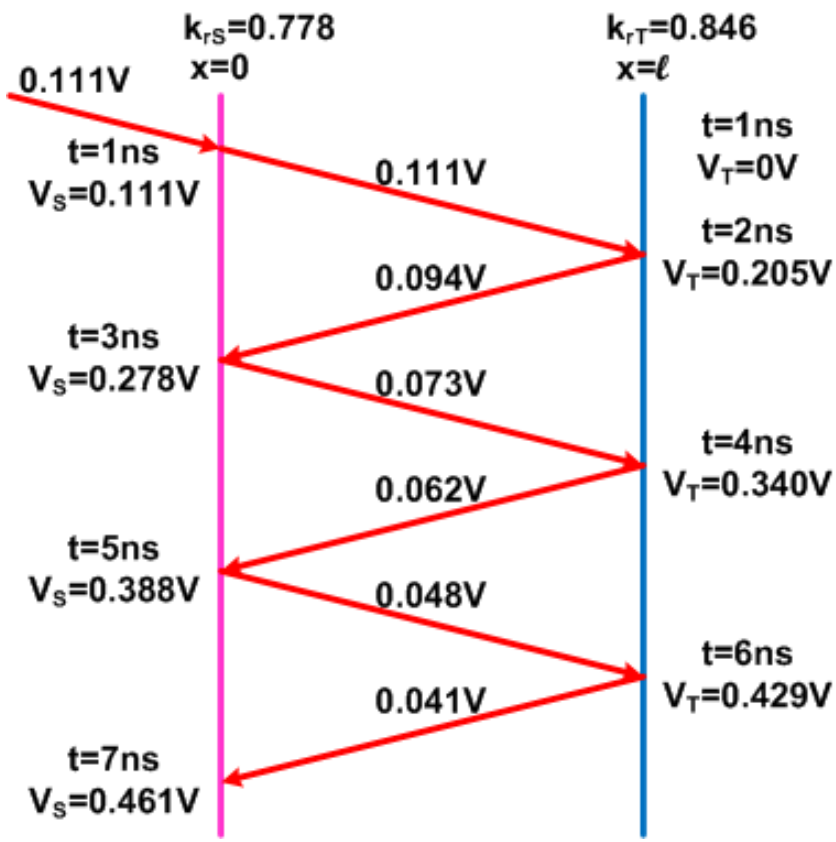

$R_S = 400\Omega$

$Z_0 = 50\Omega$, $t_d = 1ns$

$R_T = 600\Omega$

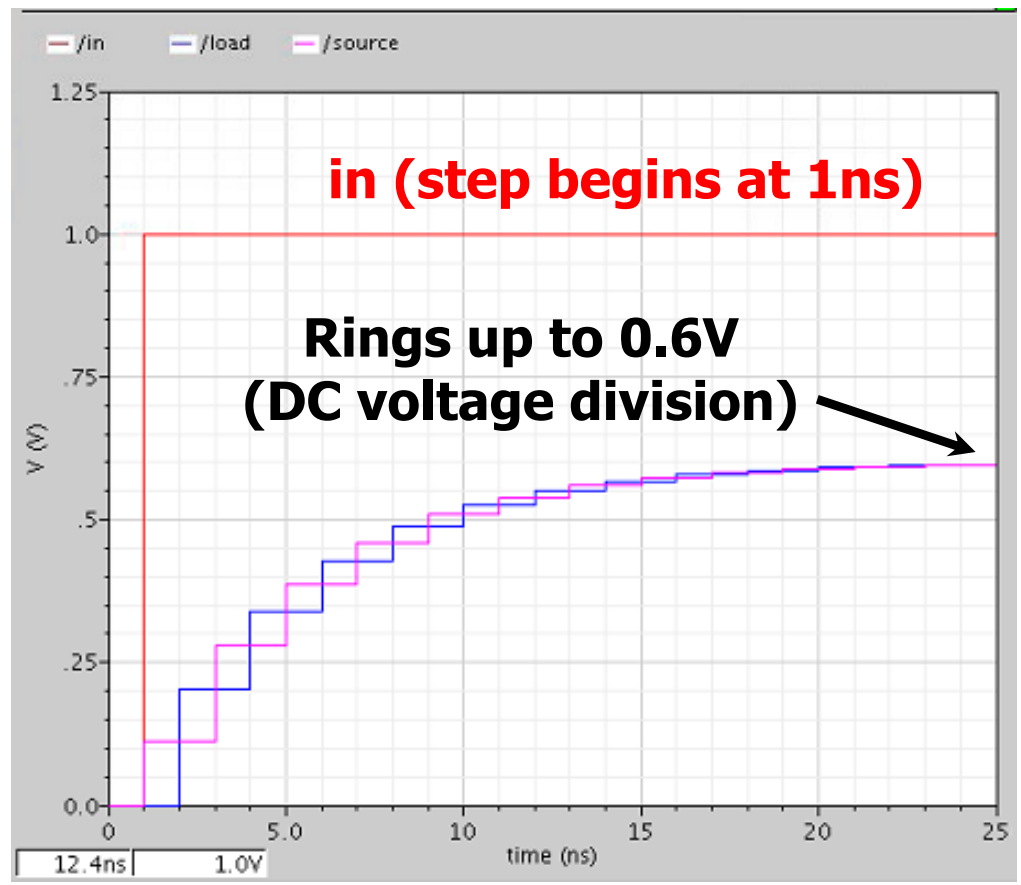

Termination Reflection Patterns

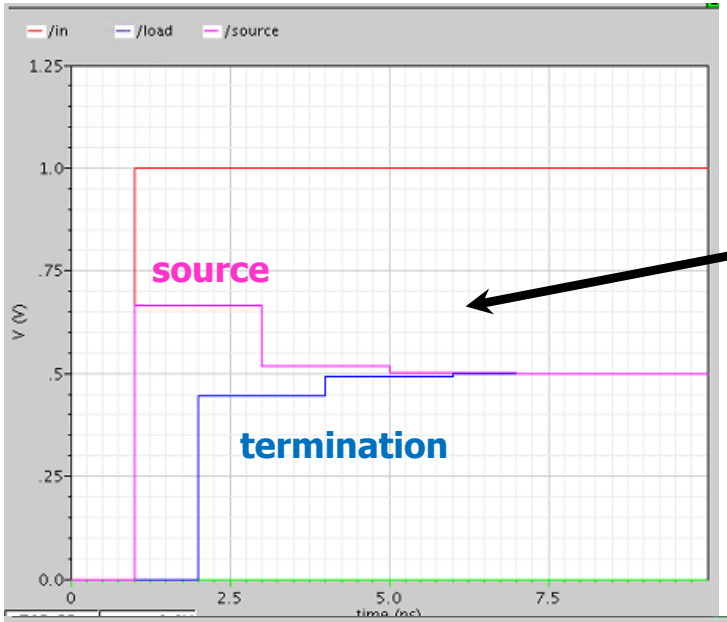

R_S = 25Ω, RT = 25Ω

kr_S & kr_T < 0

Voltages Converge

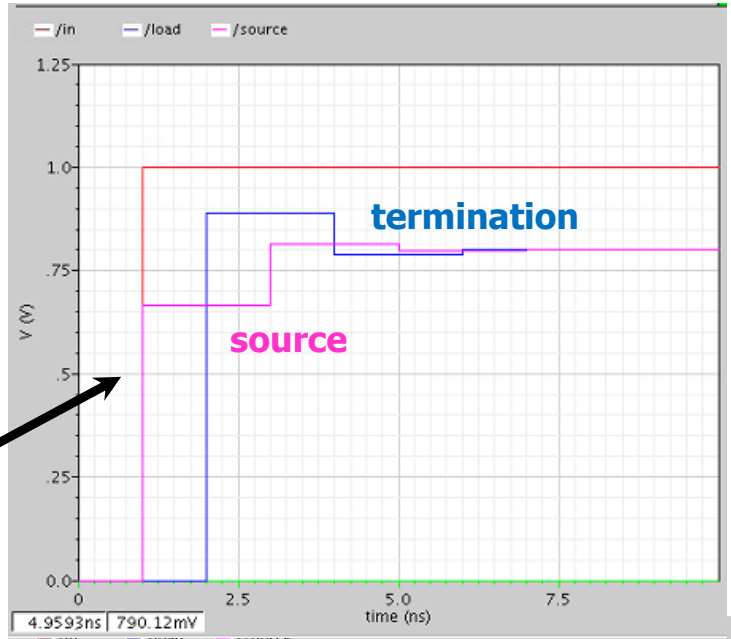

R_S = 25Ω, RT = 100Ω

kr_S < 0 & kr_T > 0

Voltages Oscillate

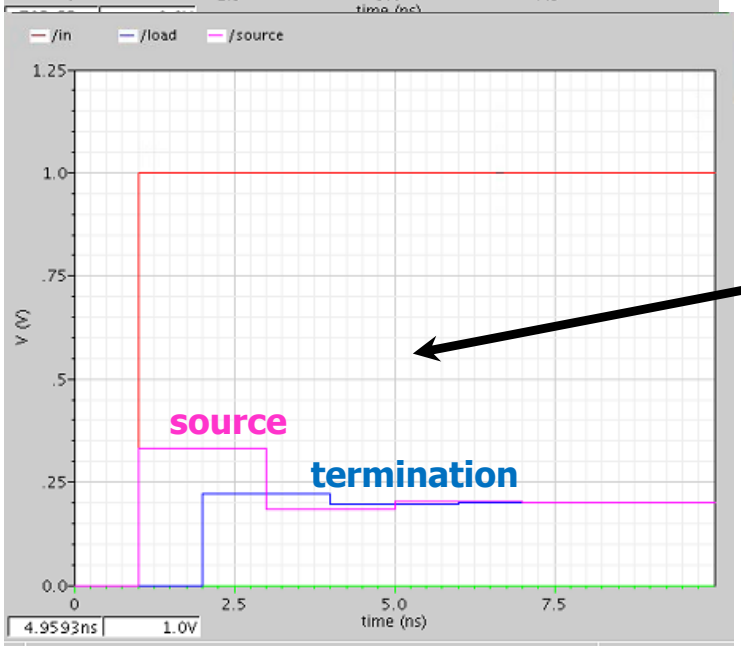

R_S = 100Ω, RT = 25Ω

kr_S > 0 & kr_T < 0

Voltages Oscillate

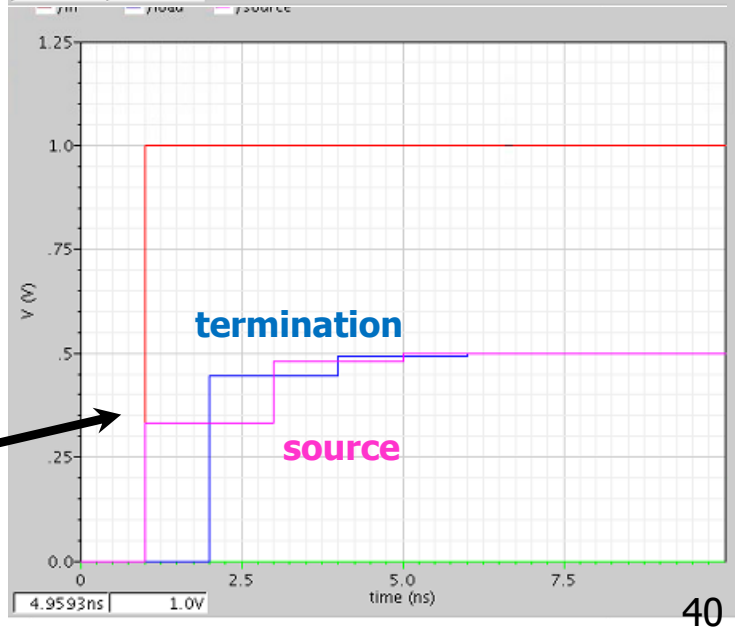

R_S = 100Ω, RT = 100Ω

kr_S > 0 & kr_T > 0

Voltages Ring Up

Termination Schemes

- No Termination
  - Little to absorb line energy
  - Can generate oscillating waveform
  - Line must be **very short** relative to signal transition time
    - n = 4 - 6
  - Limited off-chip use

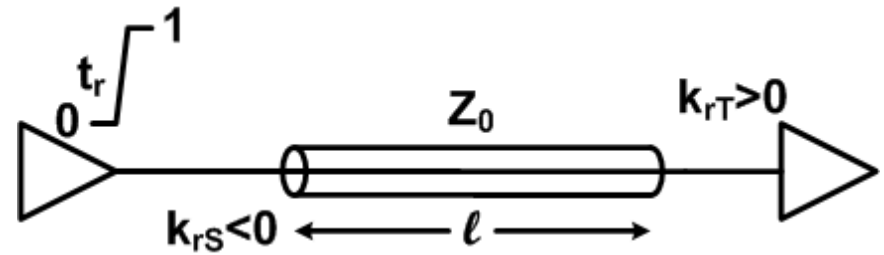

$$t_r > nT_{round-trip} = 2nl\sqrt{LC}$$

- Source Termination
  - Source output takes 2 steps up
  - Used in moderate speed point-to-point connections

$$t_{porch} \cong 2l\sqrt{LC}$$

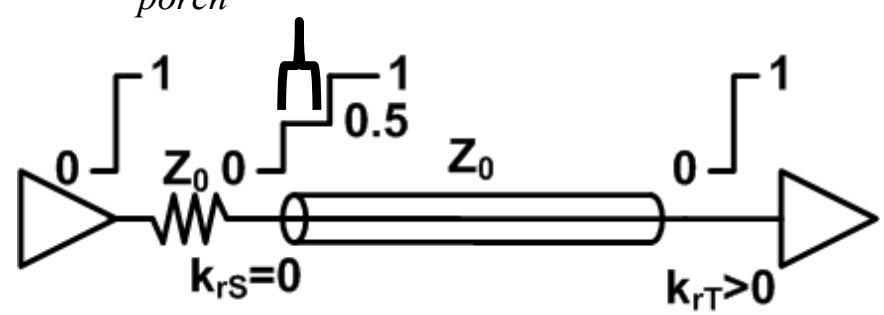

Termination Schemes

- Receiver Termination
  - No reflection from receiver
  - Watch out for intermediate impedance discontinuities
    - Little to absorb reflections at driver

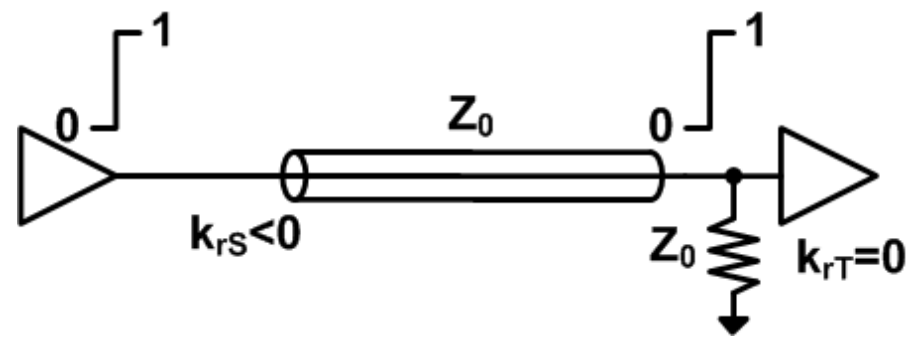

- Double Termination
  - Best configuration for min reflections
    - Reflections absorbed at both driver and receiver
  - Get half the swing relative to single termination
  - Most common termination scheme for high performance serial links

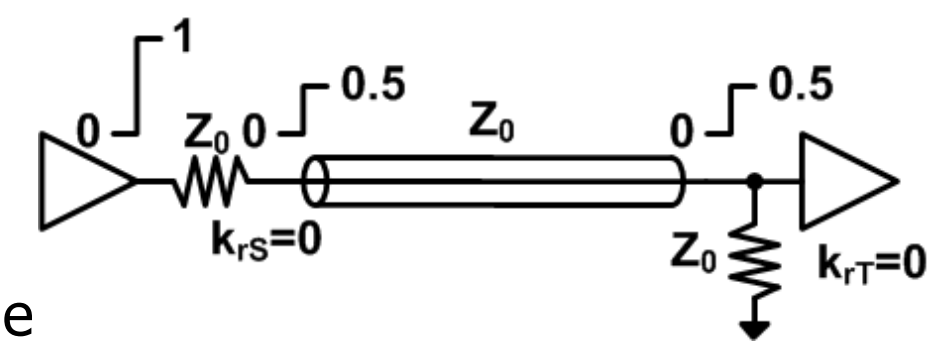

Differential Signaling

- Differential signaling advantages
  - Self-referenced
  - Common-mode noise rejection
  - Increased signal swing
  - Reduced self-induced power-supply noise
- Requires 2x the number of signaling pins relative to single-ended signaling
  - But, smaller ratio of supply/signal (return) pins
  - Total pin overhead is typically 1.3-1.8x (vs 2x)

Odd & Even Modes

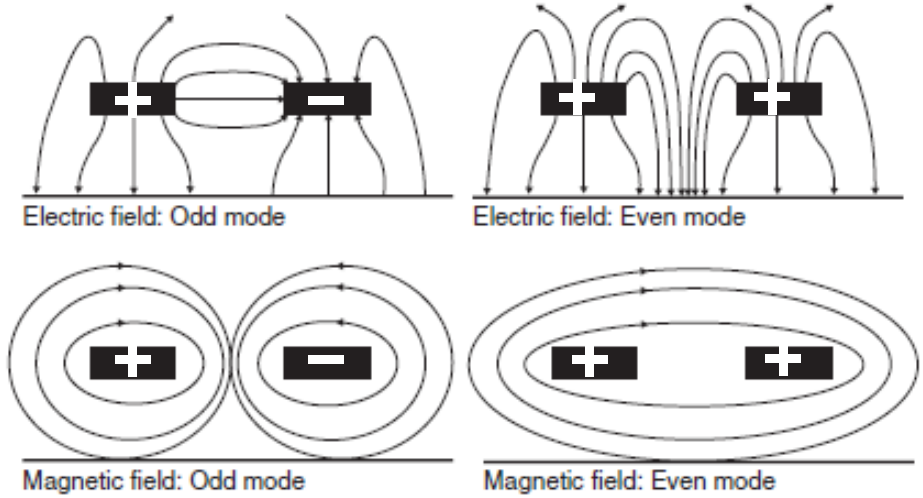

[**Hall**]

- Even mode
  - When equal voltages drive both lines, only one mode propagates called even more
- Odd mode
  - When equal in magnitude, but out of phase, voltages drive both lines, only one mode propagates called odd mode
- For a differential pair (odd mode), a virtual reference plane exists between the conductors that provides a continuous return current path
  - Electric field is perpendicular to the virtual plane
  - Magnetic field is tangent to the virtual plane

Balanced Transmission Lines

- Even (common) mode excitation
  - Effective C = C_C
  - Effective L = L + M
- Odd (differential) mode excitation
  - Effective C = C_C + $2C_d$
  - Effective L = L – M

$$Z_{DIFF} = 2Z_{odd}, \quad Z_{CM} = \frac{Z_{even}}{2}$$

[**Dally**]

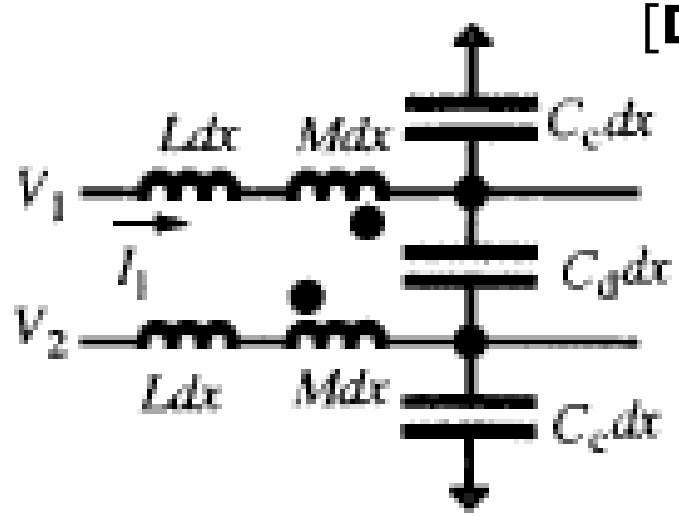

(a) Model of a Balanced Line

$$Z_{even} = \left(\frac{L+M}{C_c}\right)^{1/2}$$

$$Z_{odd} = \left(\frac{L-M}{C_c+2C_d}\right)^{1/2}$$

PI-Termination

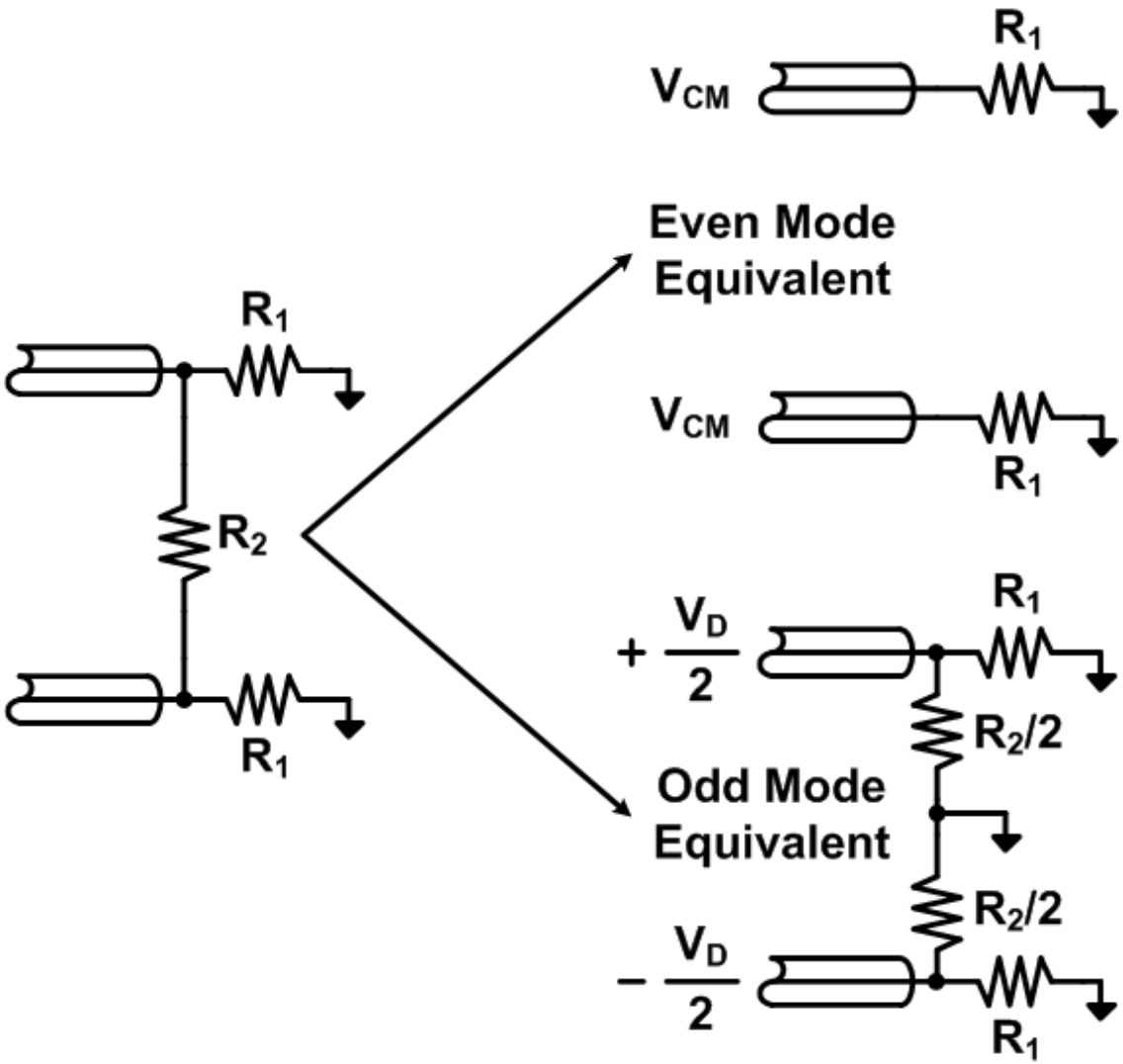

$$\boxed{Z_{even} = R_1}$$

$$Z_{odd} = R_1 \parallel R_2/2 = Z_{even} \parallel R_2/2$$

$$\boxed{R_2 = 2\left(\frac{Z_{odd} Z_{even}}{Z_{even} - Z_{odd}}\right)}$$

T-Termination

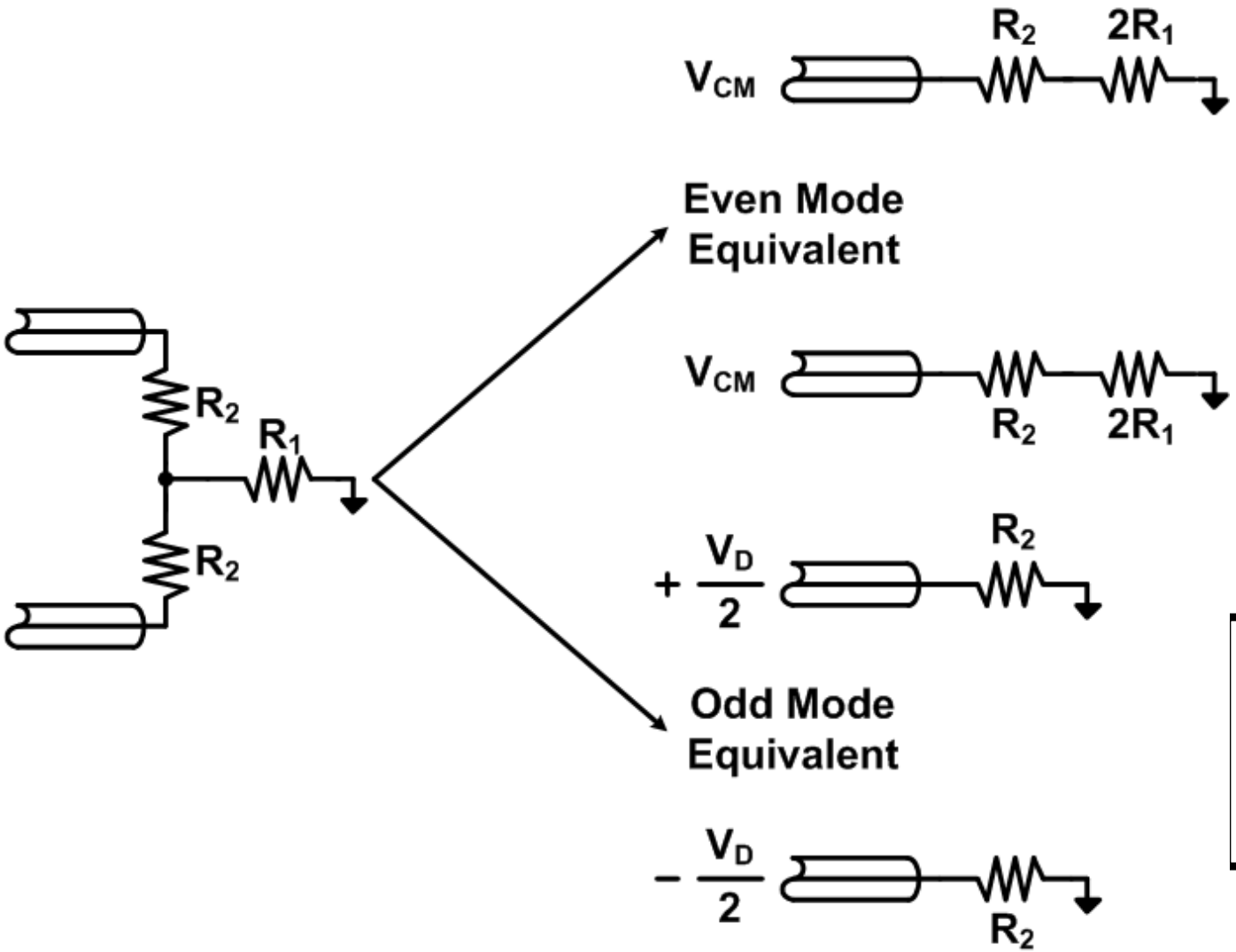

$$Z_{even} = R_2 + 2R_1$$

$$Z_{odd} = R_2$$

$$R_1 = \frac{1}{2}\left(Z_{even} - Z_{odd}\right)$$

Next Time

- Channel modeling
  - Time domain reflectometer (TDR)
  - Network analysis