ECEN620: Network Theory Broadband Circuit Design Fall 2023

Lecture 15: High-Speed Wireline Transmitters

Sam Palermo
Analog & Mixed-Signal Center
Texas A&M University

Announcements

- Exam 2 Thursday Nov 30
  - One double-sided 8.5x11 notes page allowed
  - Bring your calculator
  - Covers through Lecture 14
- Project Final Report due Dec 4

Agenda

- Common wireline modulation schemes
- Electrical transmitters
- Electrical channel issues & optical link motivation
- Optical channels & modulation techniques
- Optical transmitter circuits
  - Vertical-cavity surface-emitting laser (VCSEL)
  - Mach-Zehnder modulator (MZM)
  - Electro-absorption modulator (EAM)
  - Ring-resonator modulator (RRM)
- Conclusion

High-Speed Serial I/O

- Found in applications ranging from high-end computing systems to smart mobile devices

- Typical processor platform
  - Processor-to-memory: DDR4
  - Processor-to-peripheral: PCIe & USB
  - Storage: SATA
  - Network: LAN

- Mobile systems
  - DSI : Display Serial Interface
  - CSI : Camera Serial Interface
  - UniPRO : MIPI Universal Protocol

AMD EPYC Rome Platform

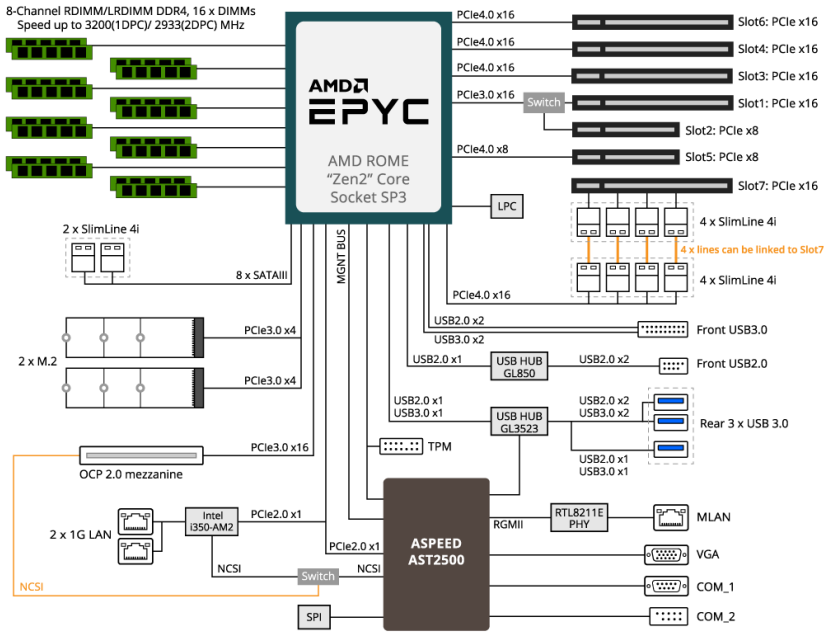

High-Speed Electrical Link System

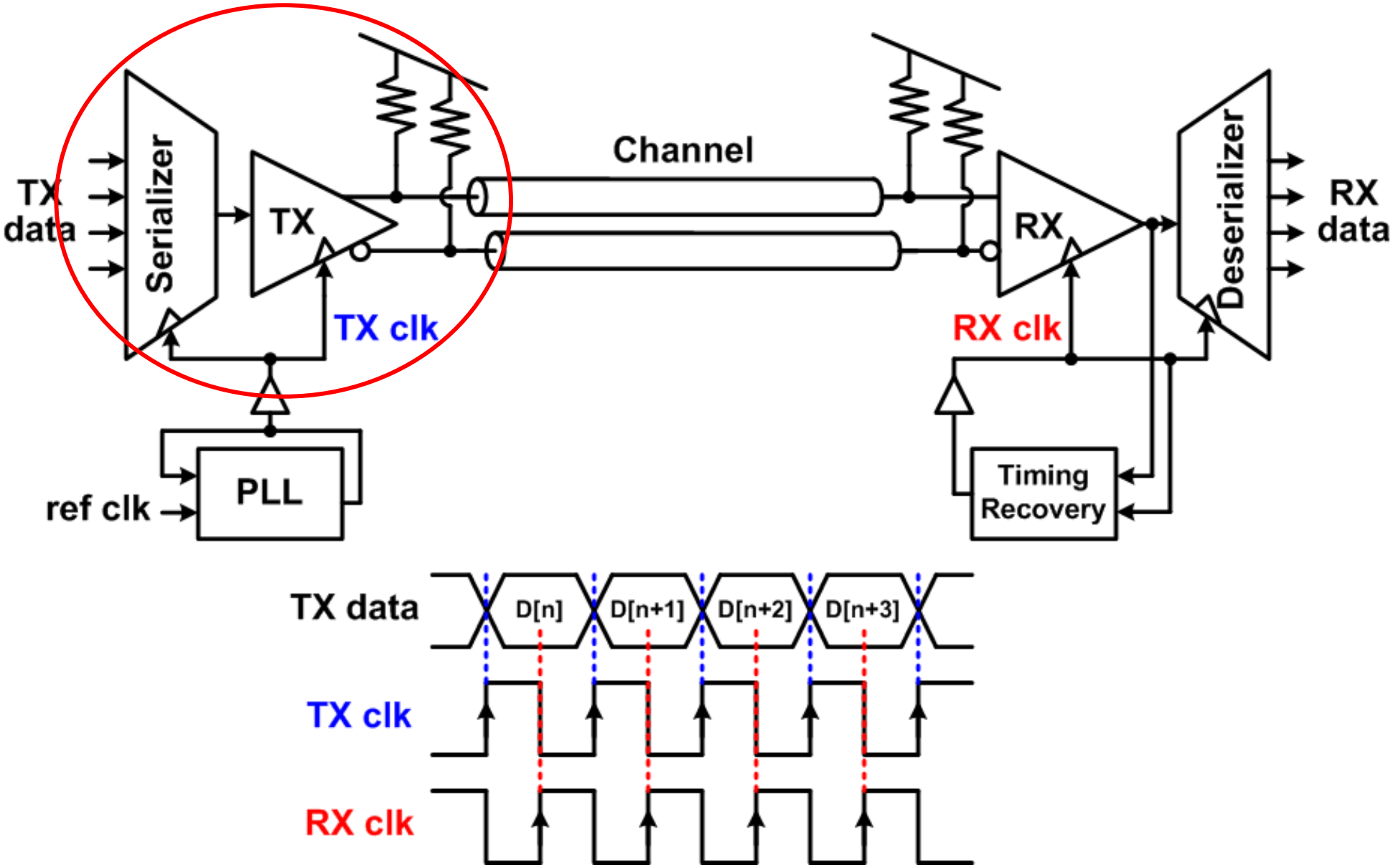

PAM-2 (NRZ) vs PAM-4 Modulation

- Binary, NRZ, PAM-2
  - Simplest, most common modulation format
- PAM-4
  - Transmit 2 bits/symbol
  - Less channel equalization and circuits run ½ speed

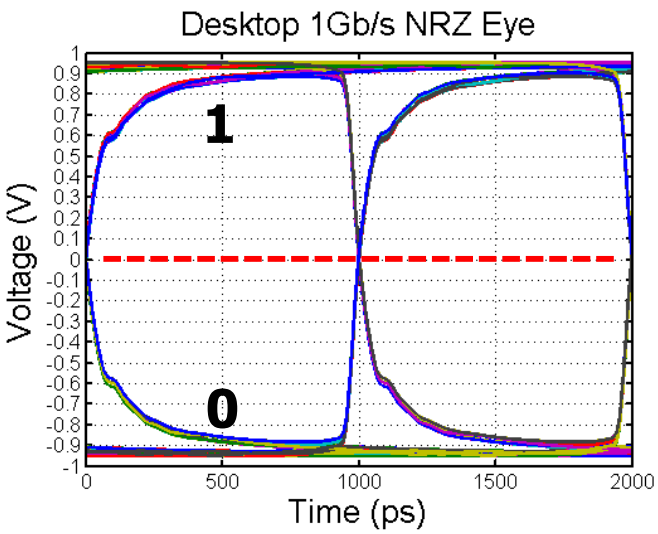

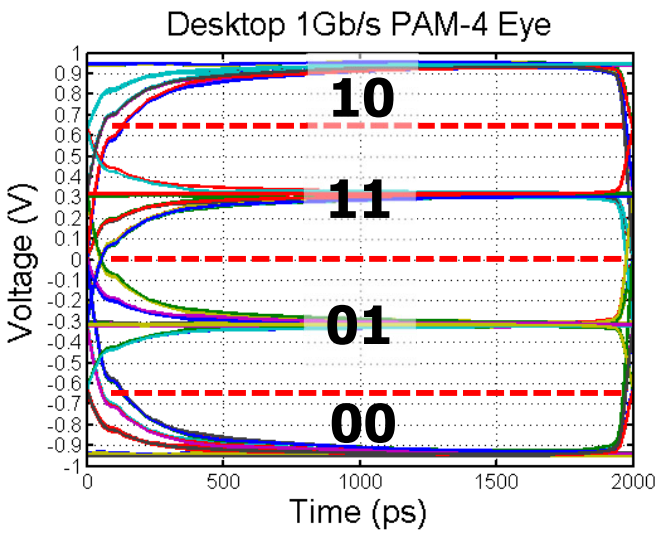

Modulation Frequency Spectrum

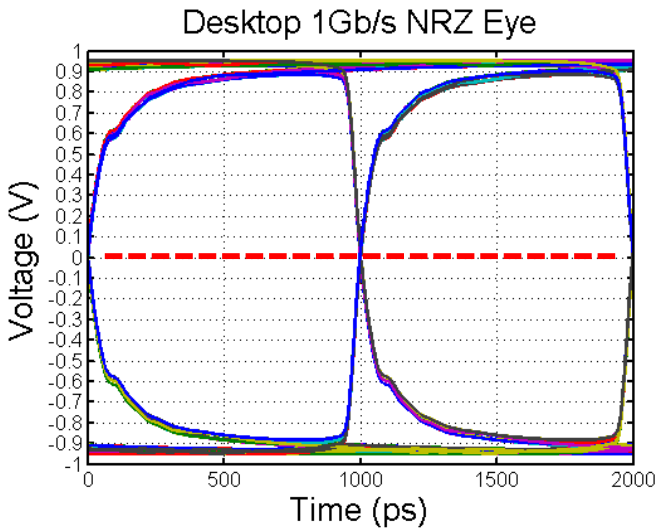

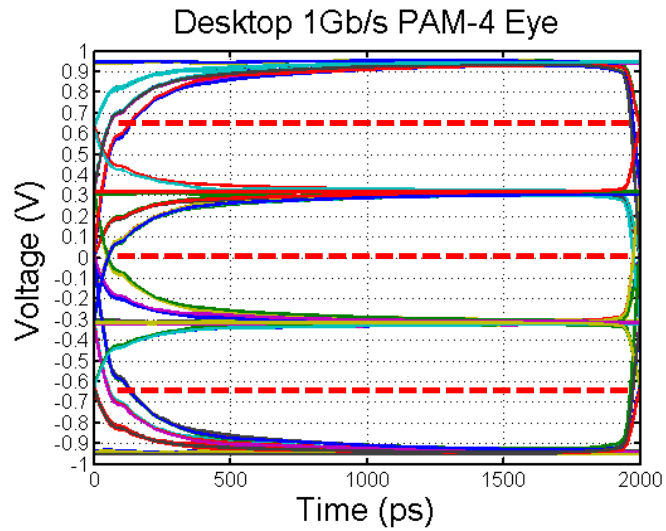

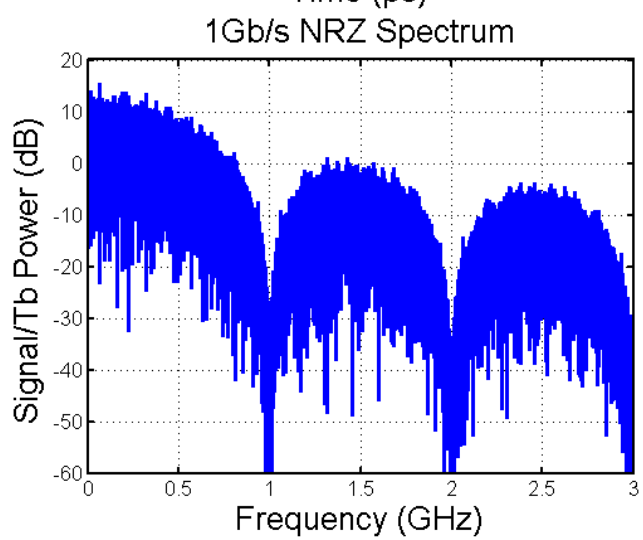

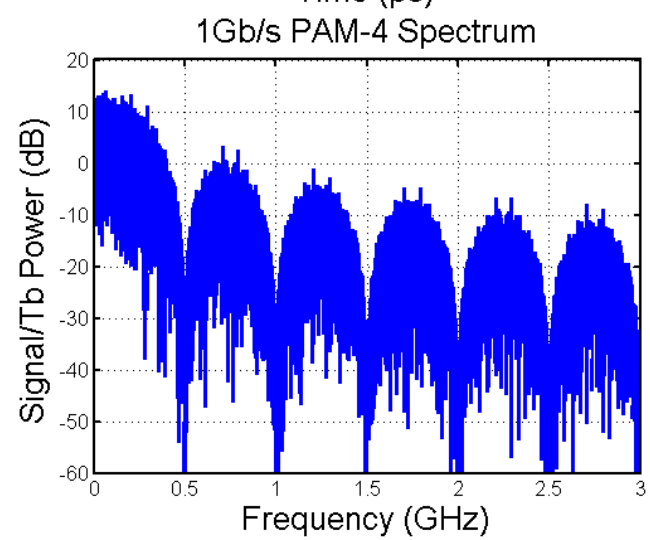

Majority of signal power in 1GHz bandwidth

Majority of signal power in 0.5GHz bandwidth

Nyquist Frequency

- Nyquist bandwidth constraint:
  - The theoretical minimum required system bandwidth to detect R_S (symbols/s) without ISI is $R_S/2$ (Hz)
  - Thus, a system with bandwidth $W=1/2T=R_S/2$ (Hz) can support a maximum transmission rate of $2W=1/T=R_S$ (symbols/s) without ISI

$$\frac{1}{2T} = \frac{R_S}{2} \le W \Rightarrow \frac{R_S}{W} \le 2 \quad \text{(symbols/s/Hz)}$$

  - For ideal Nyquist pulses (sinc), the required bandwidth is only $R_S/2$ to support an R_S symbol rate

Modulation	Bits/Symbol	Nyquist Frequency
NRZ	1	$R_s/2=1/2T_b$
PAM-4	2	$R_s/2=1/4T_b$

NRZ vs PAM-4

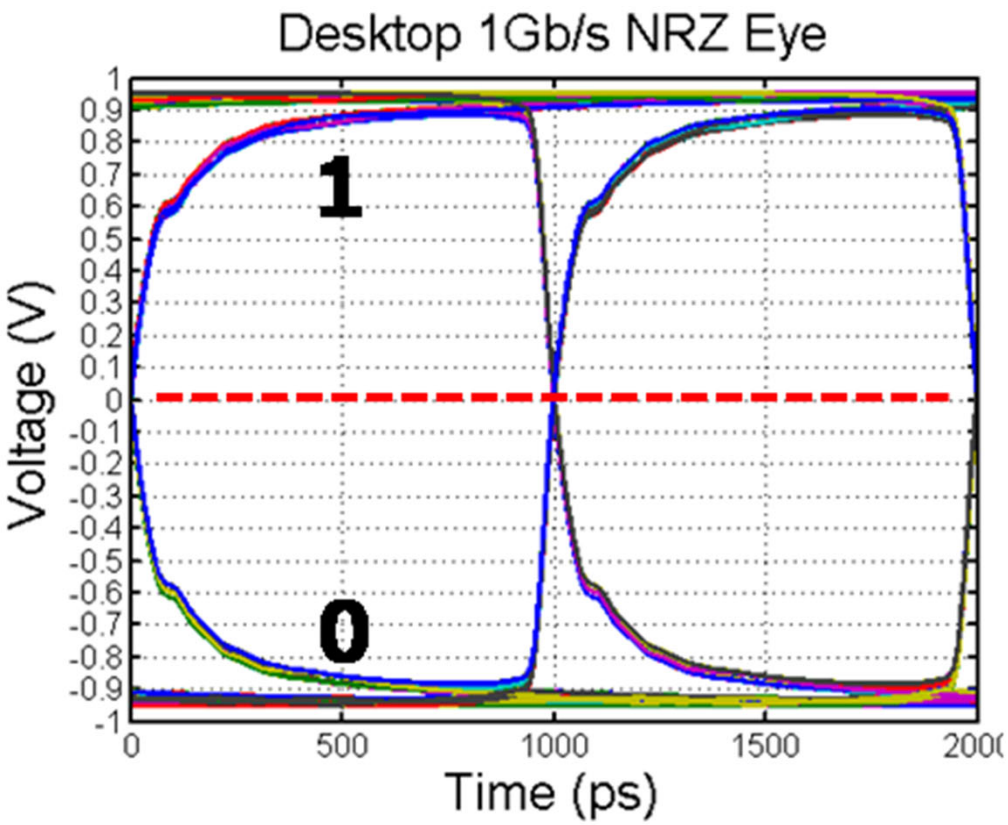

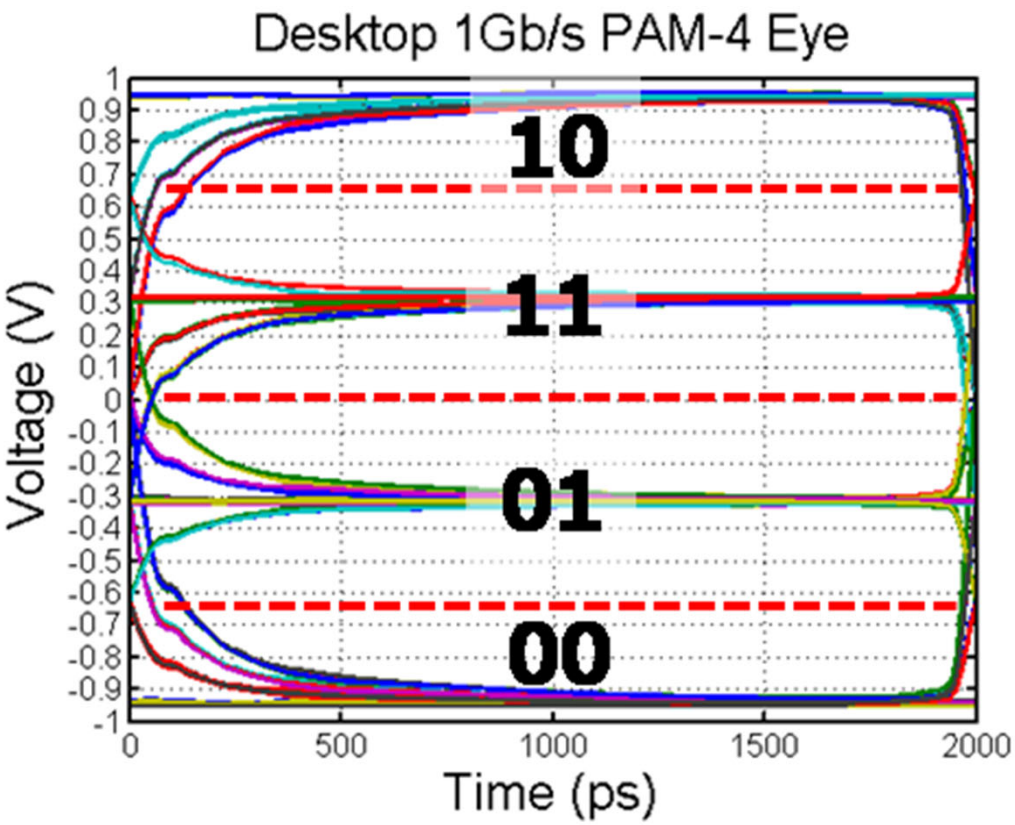

- PAM-4 should be considered when
  - Slope of channel insertion loss (S_{21}) exceeds reduction in PAM-4 eye height
    - Insertion loss over an octave is greater than 20*log10(1/3)=-9.54dB
  - On-chip clock speed limitations

NRZ vs PAM-4 – Desktop Channel

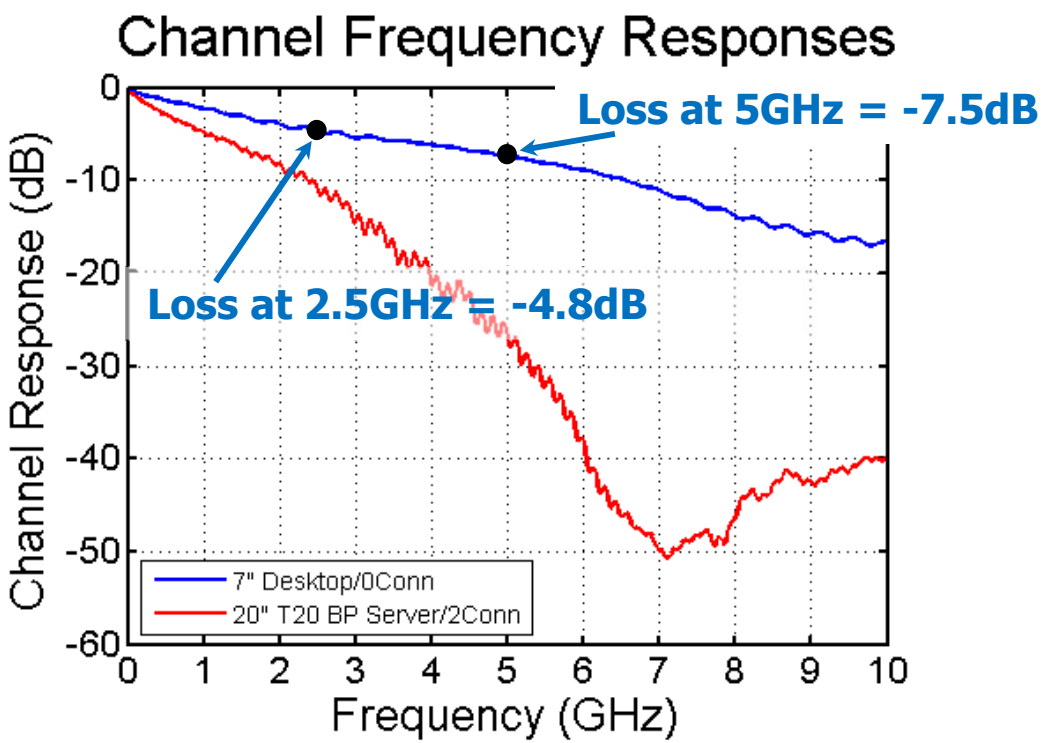

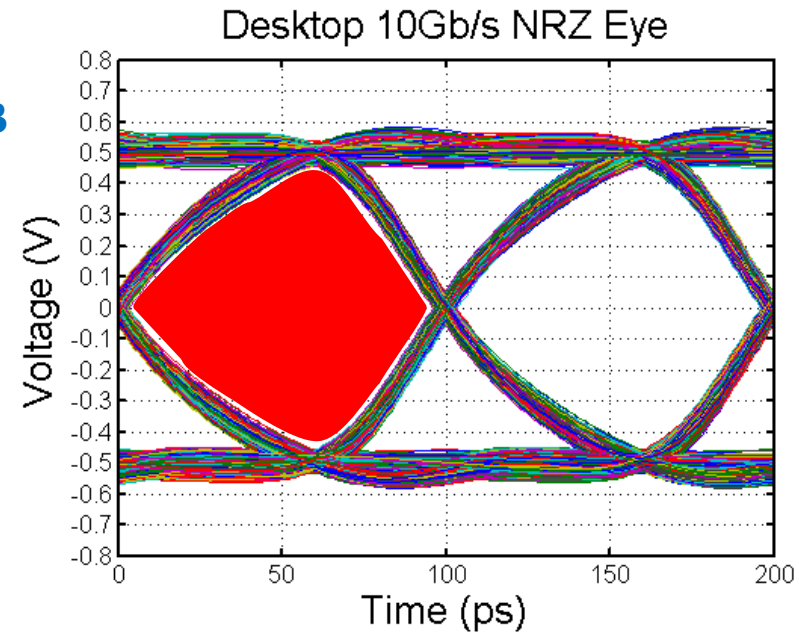

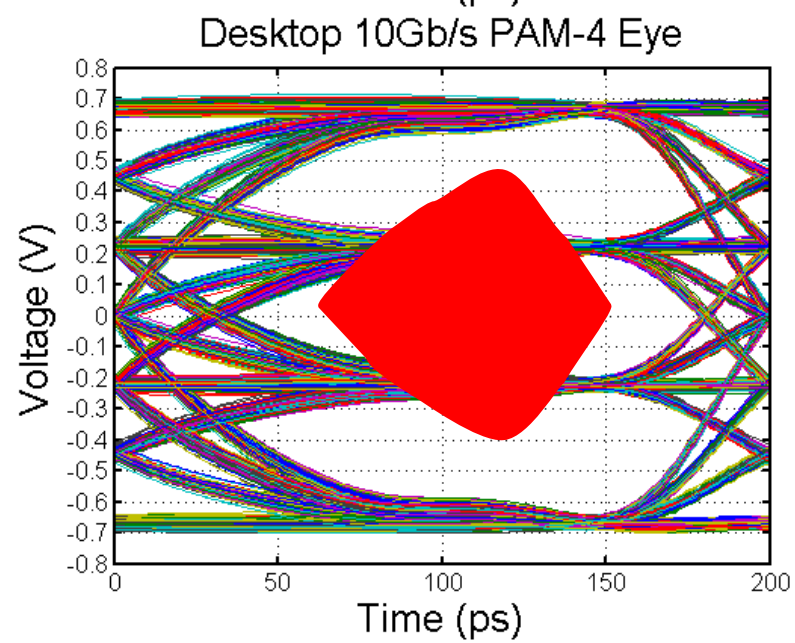

- Eyes are produced with 4-tap TX FIR equalization
- Loss in the octave between 2.5 and 5GHz is only 2.7dB
  - NRZ has better voltage margin

NRZ vs PAM-4 – T20 Server Channel

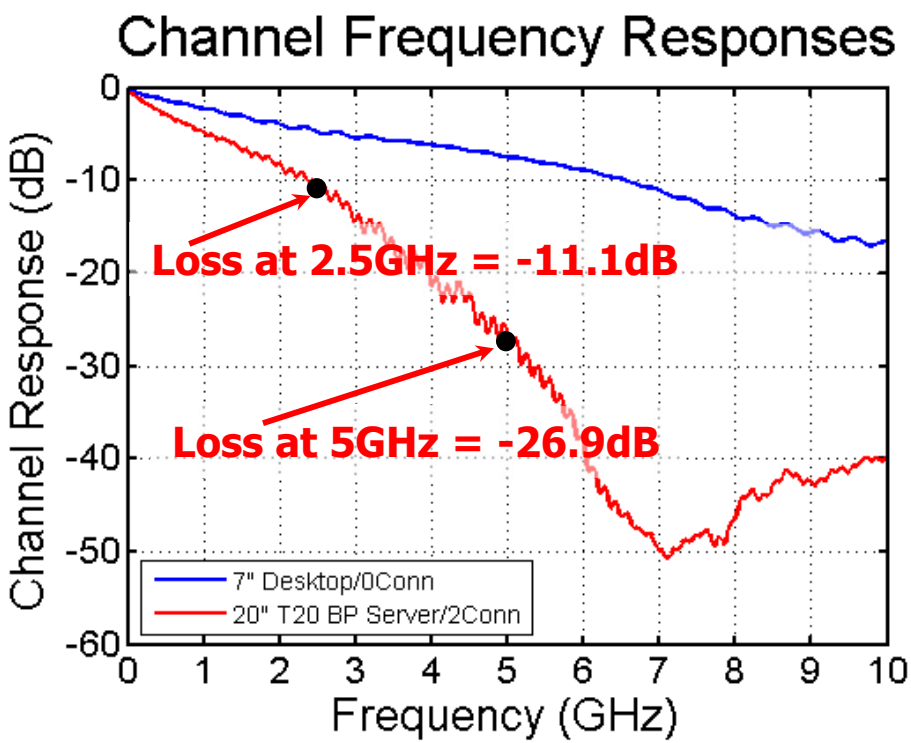

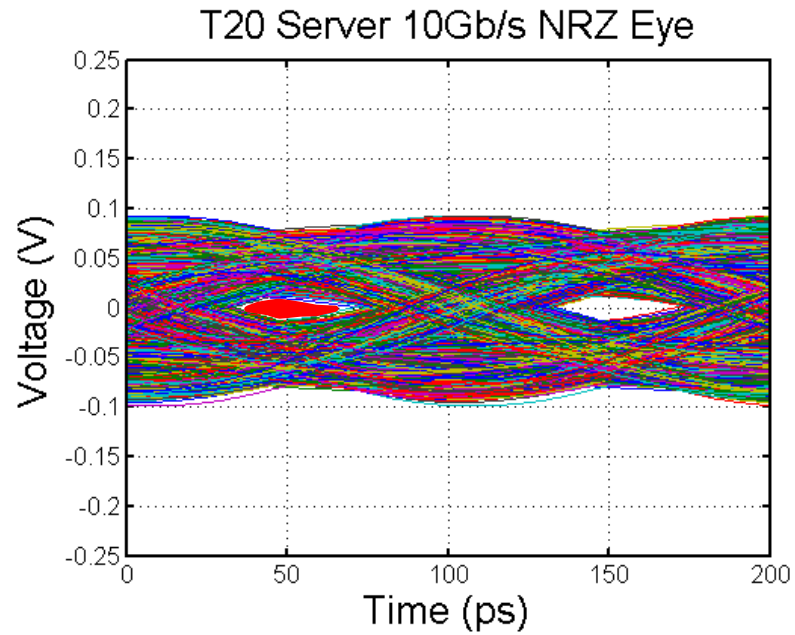

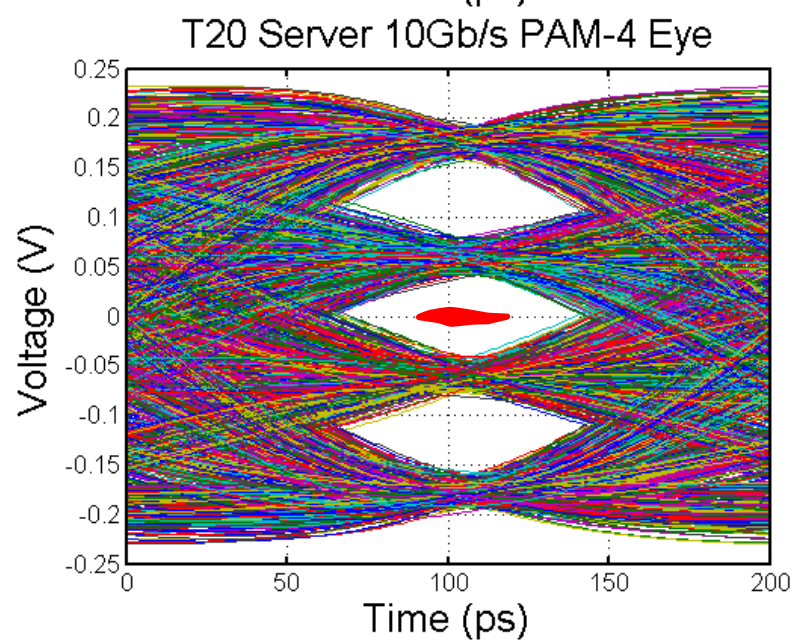

- Eyes are produced with 4-tap TX FIR equalization
- Loss in the octave between 2.5 and 5GHz is 15.8dB
  - PAM-4 "might" be a better choice

Agenda

- Common wireline modulation schemes
- Electrical transmitters
- Electrical channel issues & optical link motivation
- Optical channels & modulation techniques
- Optical transmitter circuits
  - Vertical-cavity surface-emitting laser (VCSEL)
  - Mach-Zehnder modulator (MZM)
  - Electro-absorption modulator (EAM)
  - Ring-resonator modulator (RRM)
- Conclusion

Differential Signaling

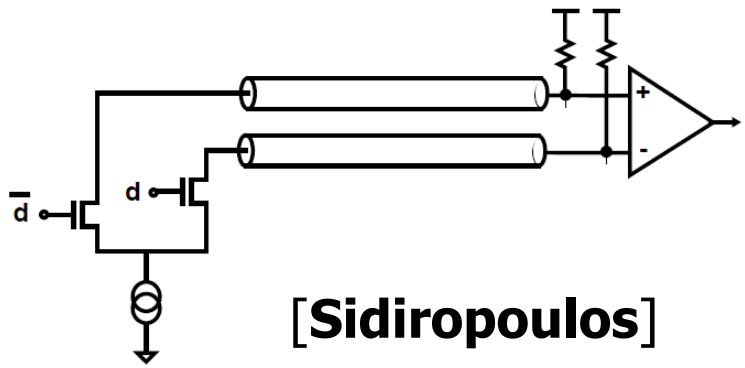

[**Sidiropoulos**]

- A difference between voltage or current is sent between two lines
- Requires 2x signal lines relative to single-ended signaling, but less return pins
- Advantages
  - Signal is self-referenced
  - Can achieve twice the signal swing
  - Rejects common-mode noise
  - Return current is ideally only DC

Current vs Voltage-Mode Driver

- Signal integrity considerations (min. reflections) requires 50Ω driver output impedance
- To produce an output drive voltage
  - Current-mode drivers use Norton-equivalent parallel termination
    - Easier to control output impedance
  - Voltage-mode drivers use Thevenin-equivalent series termination
    - Potentially ½ to ¼ the current for a given output swing

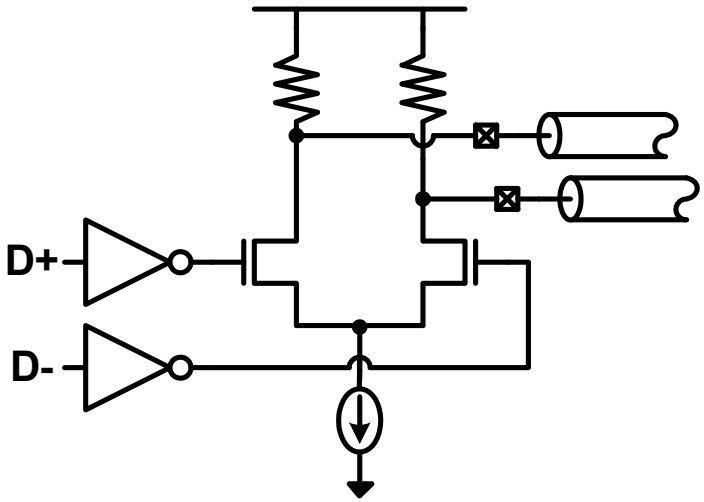

Current-Mode

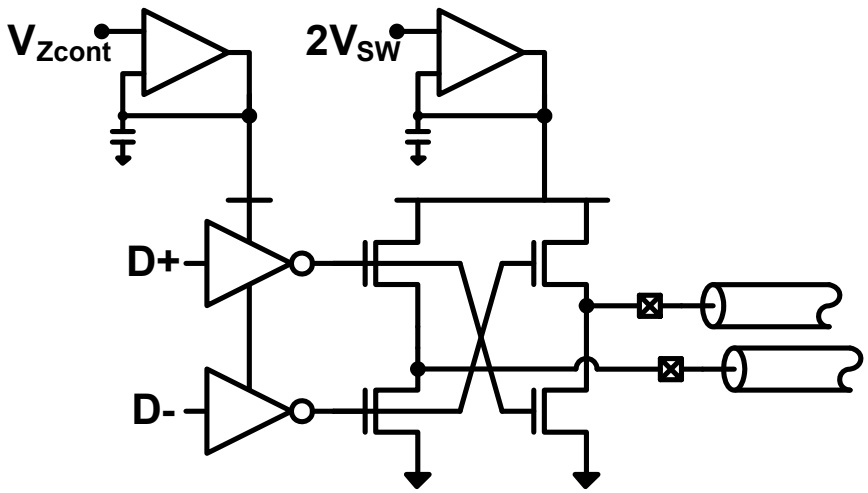

Voltage-Mode

Push-Pull Current-Mode Driver

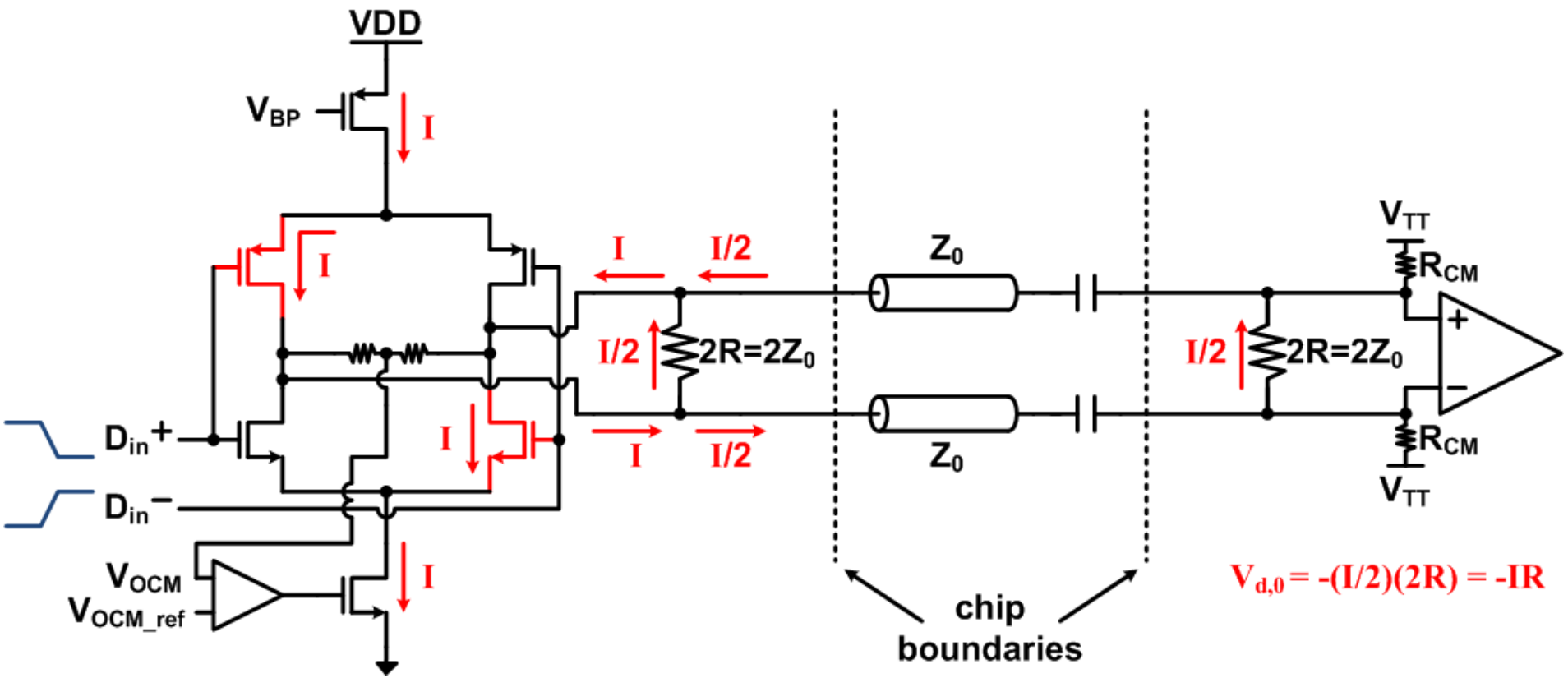

- Used in Low-Voltage Differential Signals (LVDS) standard
- Driver current is ideally constant, resulting in low dI/dt noise
- Dual current sources allow for good PSRR, but headroom can be a problem in low-voltage technologies
- Differential peak-to-peak RX swing is ±IR with double termination

Current-Mode Logic (CML) Driver

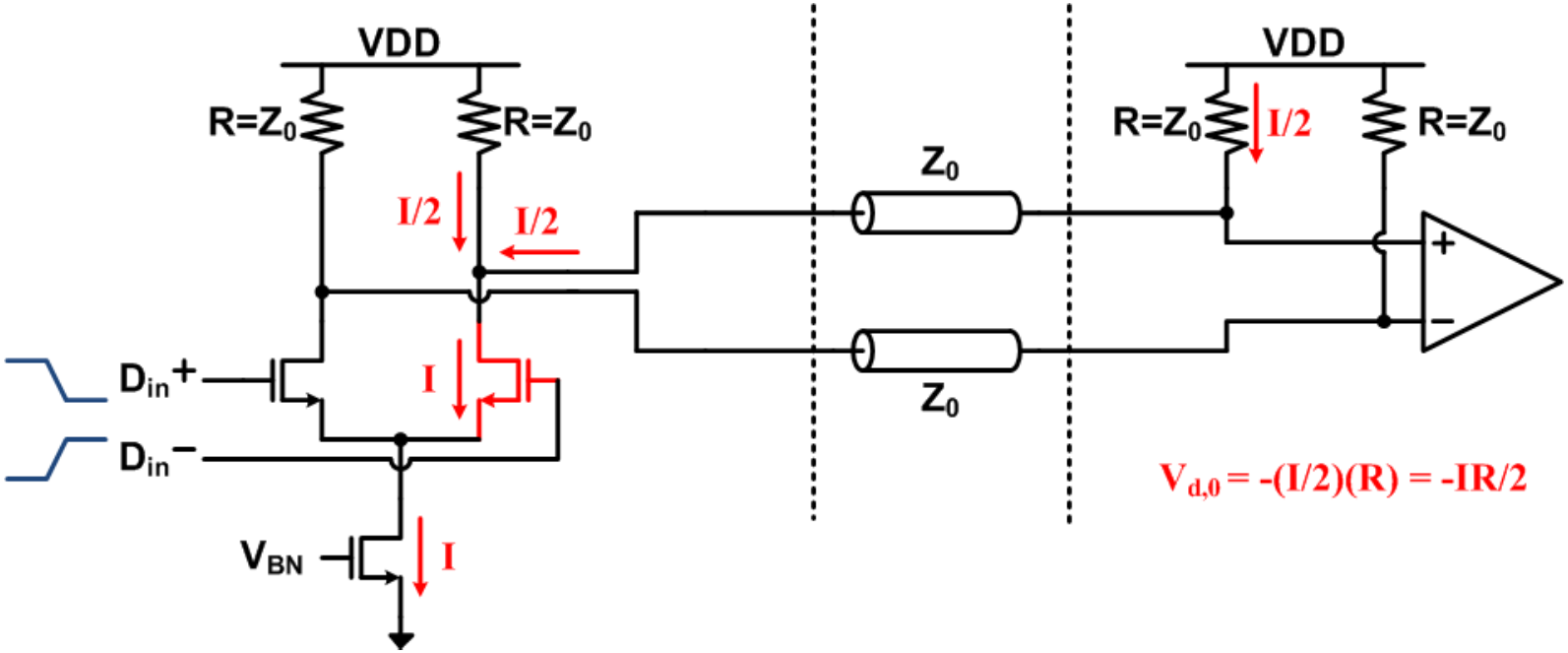

- Used in most high performance serial links
- Low voltage operation relative to push-pull driver
  - High output common-mode keeps current source saturated
- Can use DC or AC coupling
  - AC coupling requires data coding
- Differential pp RX swing is ±IR/2 with double termination

Current-Mode Current Levels

Single-Ended Termination

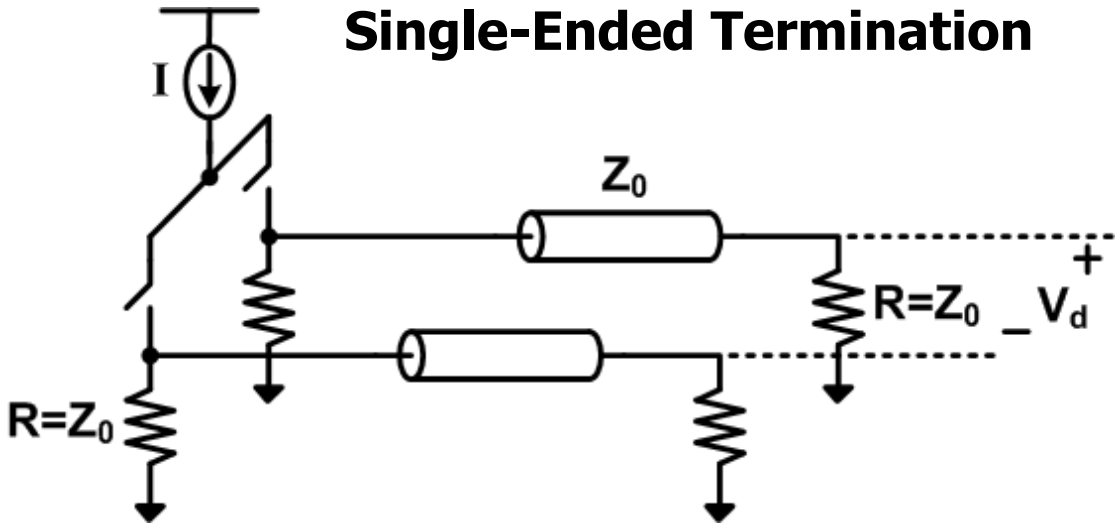

$$V_{d,1} = (I/2)R$$
$$V_{d,0} = -(I/2)R$$
$$V_{d,pp} = IR$$
$$\boldsymbol{I = \frac{V_{d,pp}}{R}}$$

Differential Termination

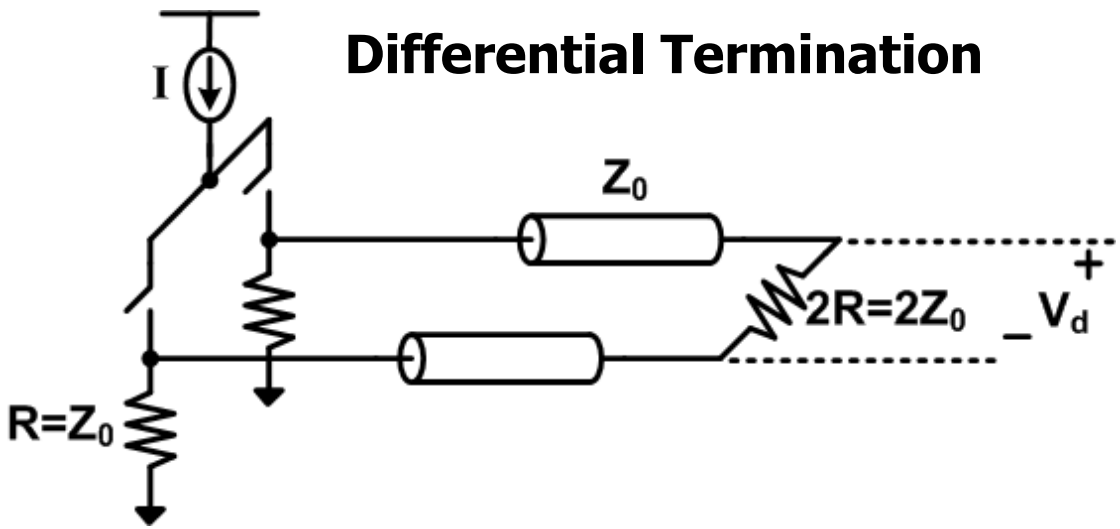

$$V_{d,1} = (I/4)(2R)$$
$$V_{d,0} = -(I/4)(2R)$$
$$V_{d,pp} = IR$$
$$\boldsymbol{I = \frac{V_{d,pp}}{R}}$$

Voltage-Mode Current Levels

Single-Ended Termination

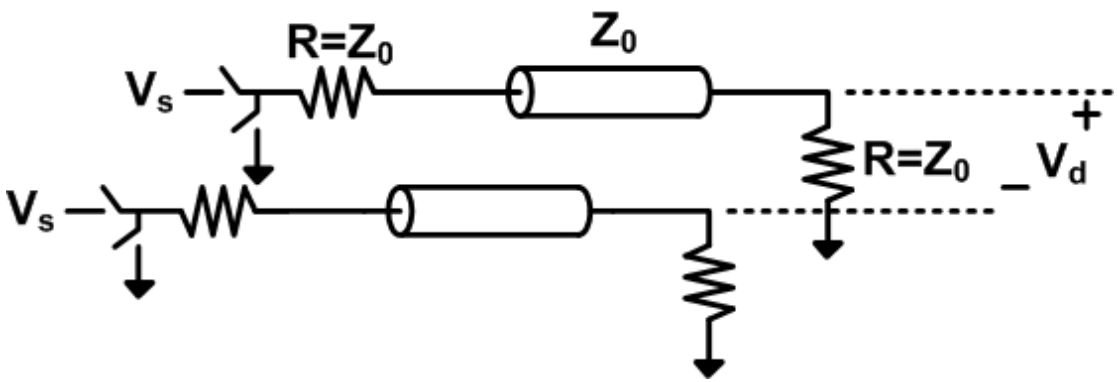

$$V_{d,1} = (V_s/2)$$
$$V_{d,1} = -(V_s/2)$$
$$V_{d,pp} = V_s$$
$$I = (V_s/2R)$$
$$\boldsymbol{I = \frac{V_{d,pp}}{2R}}$$

Differential Termination

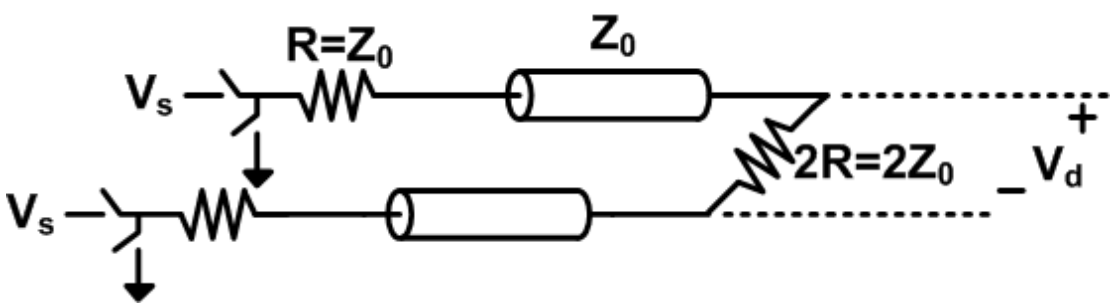

$$V_{d,1} = (V_s/2)$$
$$V_{d,1} = -(V_s/2)$$
$$V_{d,pp} = V_s$$
$$I = (V_s/4R)$$
$$\boldsymbol{I = \frac{V_{d,pp}}{4R}}$$

Current-Mode vs Voltage-Mode Summary

Driver/Termination	Current Level	Normalized Current Level
Current-Mode/SE	$V_{d,pp}/Z_0$	1x
Current-Mode/Diff	$V_{d,pp}/Z_0$	1x
Voltage-Mode/SE	$V_{d,pp}/2Z_0$	0.5x
Voltage-Mode/Diff	$V_{d,pp}/4Z_0$	0.25x

- An ideal voltage-mode driver with differential RX termination enables a *potential* 4x reduction in driver power
- *Actual* driver power levels also depend on
  - Output impedance control
  - Pre-driver power
  - Equalization implementation

Global Resistor Calibration

[**Chan ASSCC 2016**]

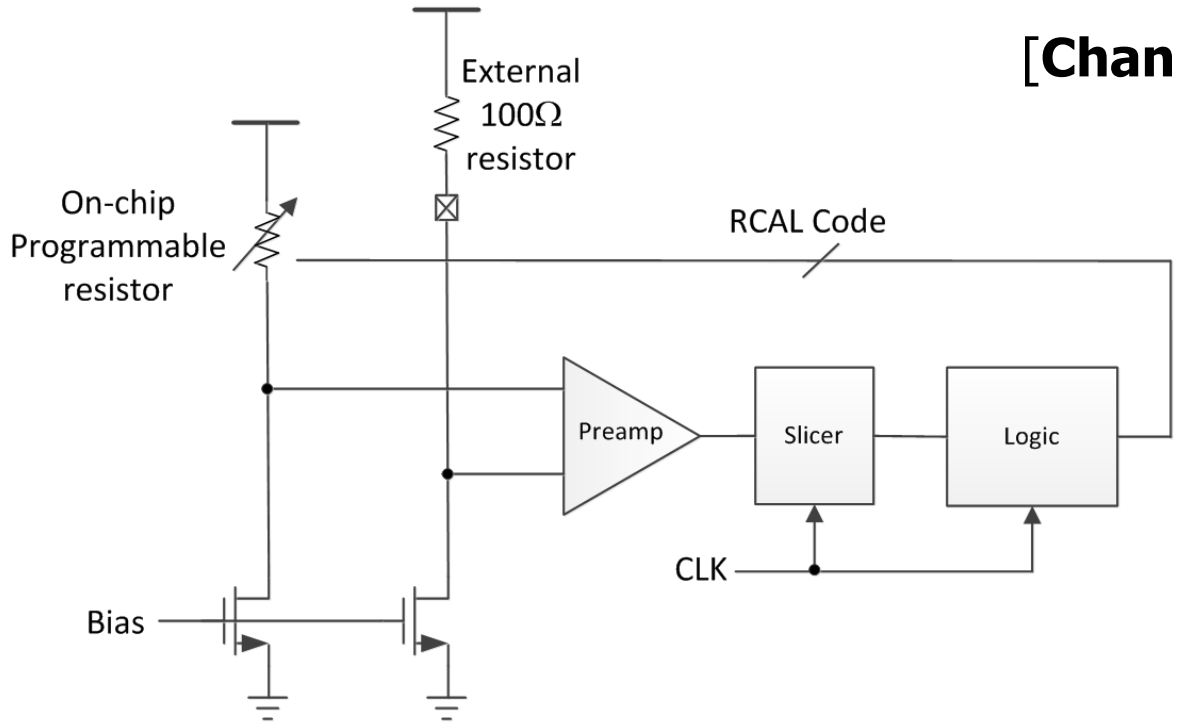

- Off-chip precision resistor is used as reference
- On-chip termination is varied until voltages are within an LSB
  - Dither filter typically used to avoid voltage noise
- In current-mode drivers, this code is used for the nominal load setting

Low-Swing Voltage-Mode Drivers

- Voltage-mode driver implementation depends on output swing requirements
- For low-swing (<400-500mVpp), an all NMOS driver is suitable

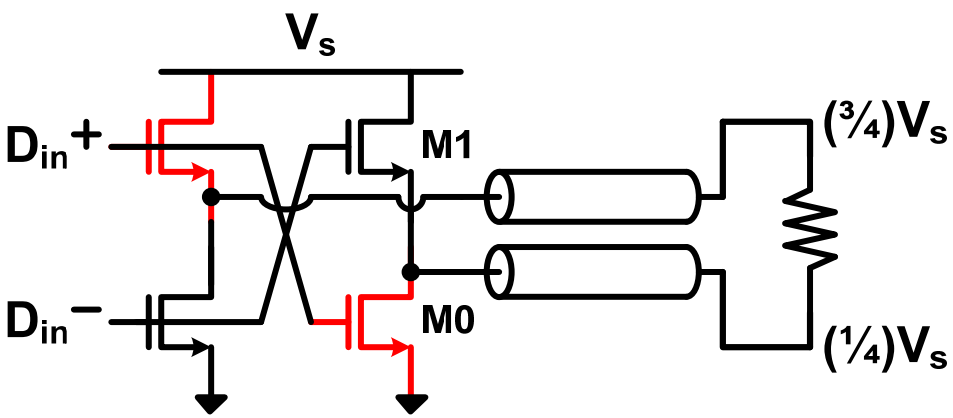

$$V_s < \frac{4}{3}\left(VDD - V_{t1} - V_{OD1}\right) \text{ (Diff. Term)}$$

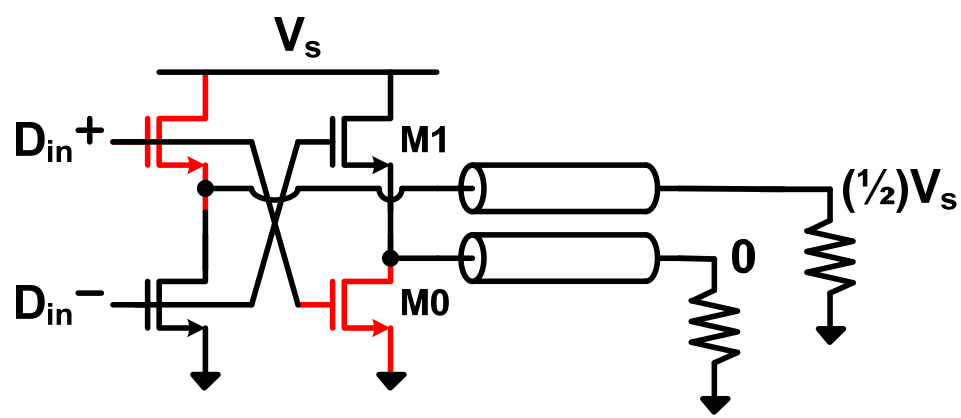

$$V_s < 2\left(VDD - V_{t1} - V_{OD1}\right) \text{ (SE Term)}$$

High-Swing Voltage-Mode Drivers

- Voltage-mode driver implementation depends on output swing requirements
- For high-swing, CMOS driver is used

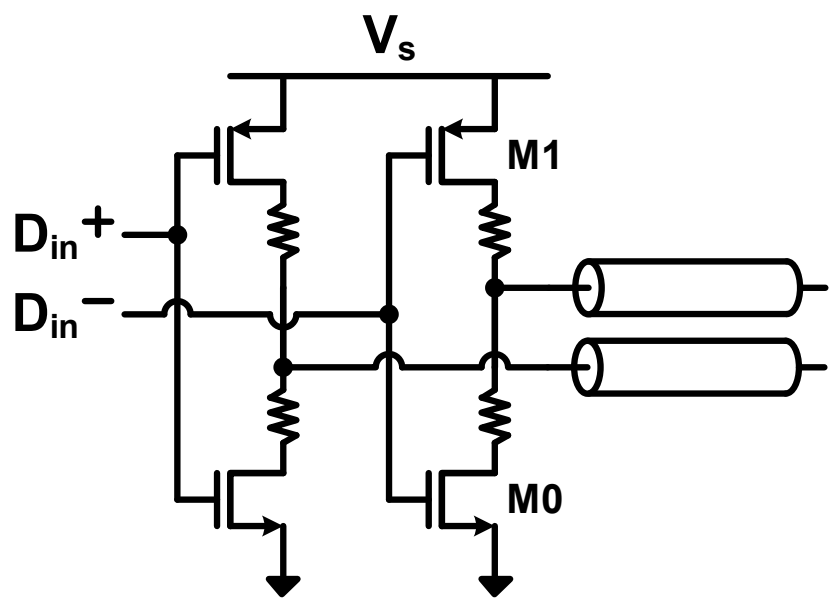

$$V_s > |V_{t1}| + V_{OD1}$$

Low-Swing VM Driver Impedance Control

[**Poulton JSSC 2007**]

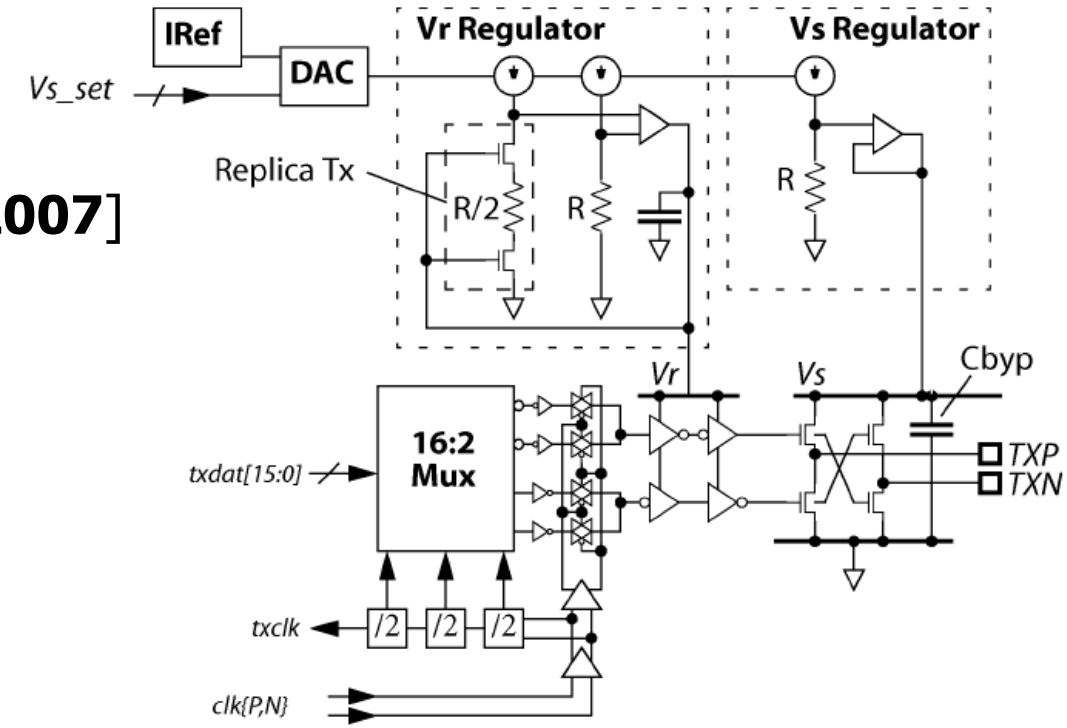

- A linear regulator sets the output stage supply, V_s
- Termination is implemented by output NMOS transistors
- To compensate for PVT and varying output swing levels, the pre-drive supply is adjusted with a feedback loop
- The top and bottom output stage transistors need to be sized differently, as they see a different V_{OD}

4:1 Output Multiplexing Voltage-Mode TX

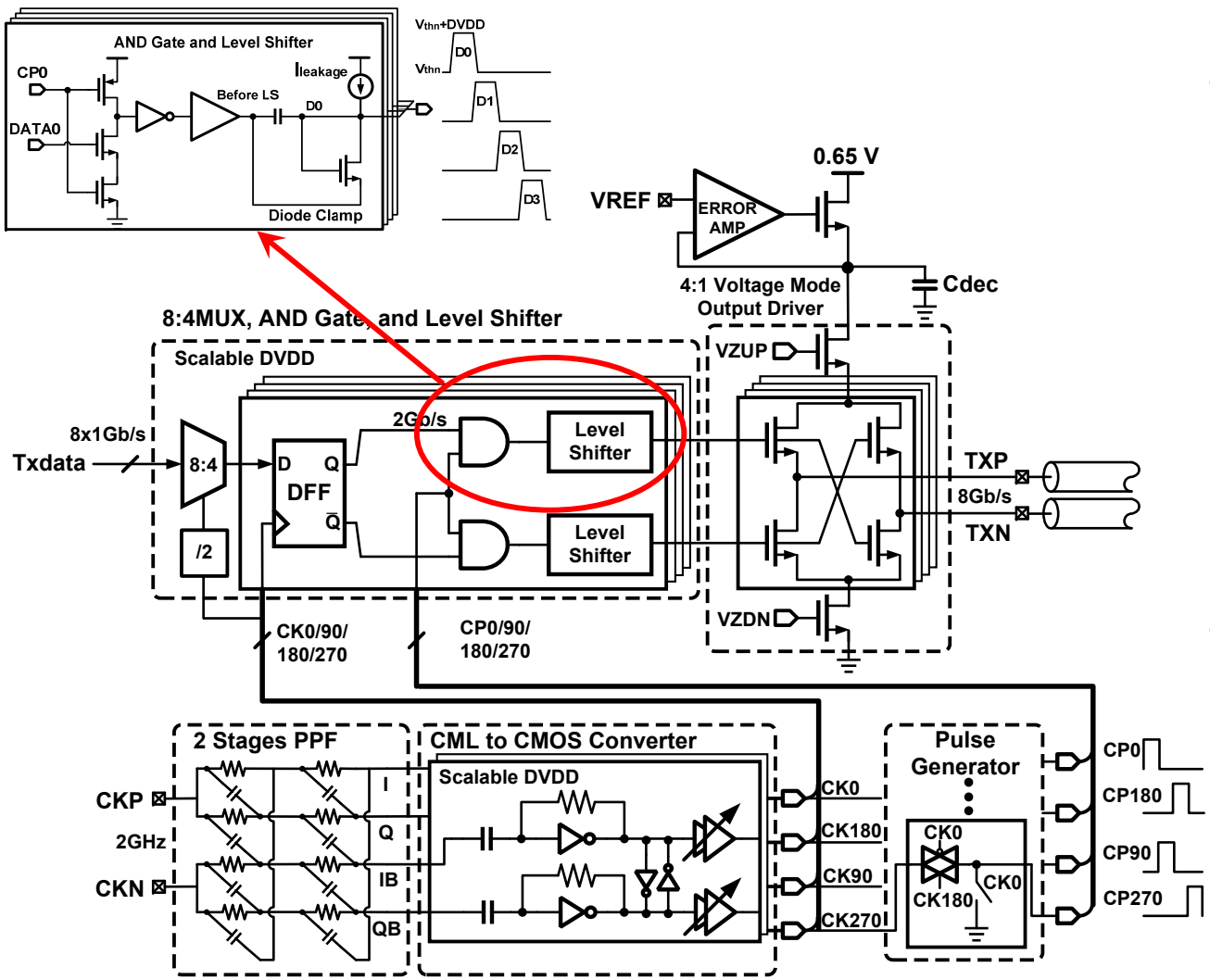

- Impedance control is achieved independent of the pre-driver supply by adding additional up/down analog-controlled NMOS transistors
- Level-shifting pre-driver allows for smaller output transistors

Y.-H. Song, R. Bai, P. Chiang, and S. Palermo, "A 0.47-0.66pJ/bit, 4.8-8Gb/s I/O Transceiver in 65nm-CMOS," IEEE JSSC, vol. 48, no. 5, pp. 1276-1289, May 2013.

Low-Swing Voltage-Mode Driver Analog Impedance Control

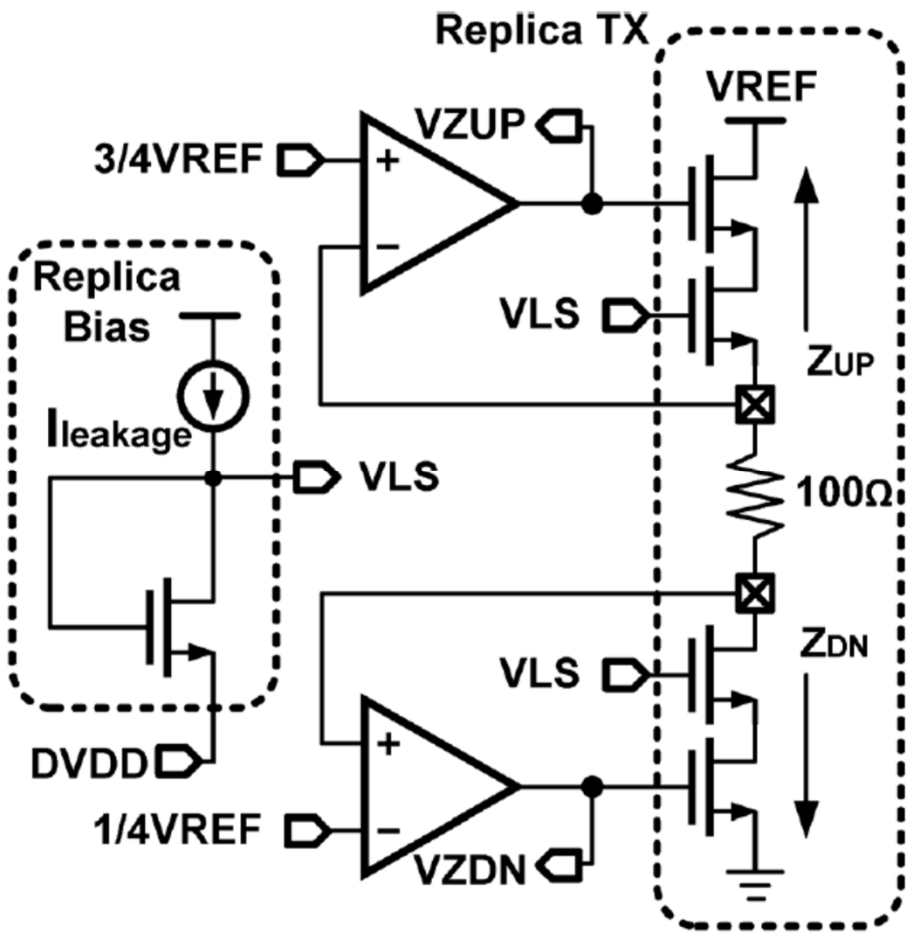

- Replica global impedance control loop provides analog gate voltages to the additional top/bottom transistors to set the pull-up/down impedance

Y.-H. Song, R. Bai, P. Chiang, and S. Palermo, "A 0.47-0.66pJ/bit, 4.8-8Gb/s I/O Transceiver in 65nm-CMOS," IEEE JSSC, vol. 48, no. 5, pp. 1276-1289, May 2013.

High-Swing Voltage-Mode Driver Impedance Control

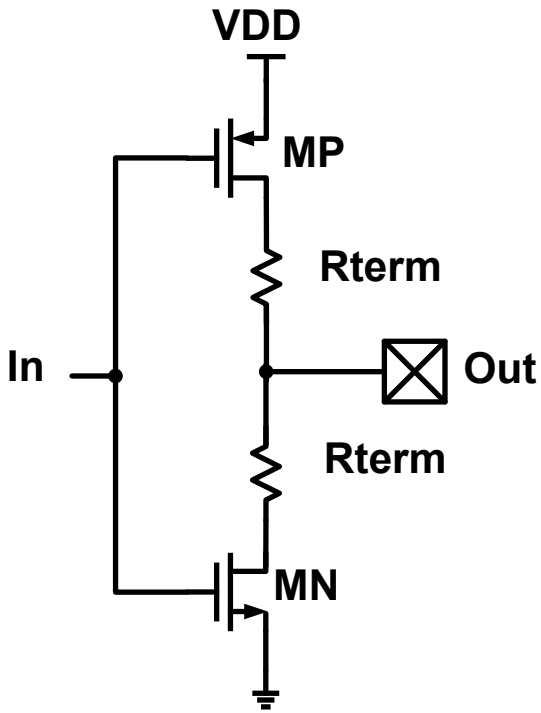

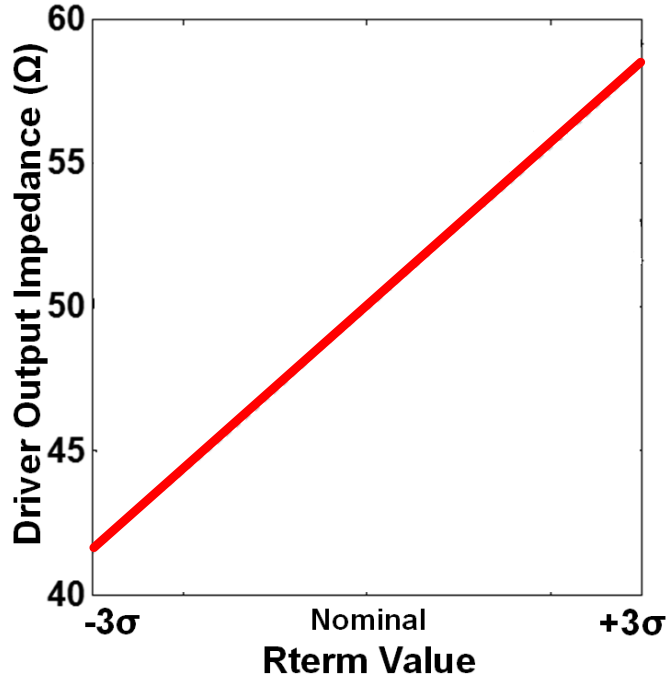

- Passive resistors + transistors' triode resistance
- Output impedance will change due to process variation
- Causes reflection and level mismatch

High-Swing Voltage-Mode Driver Impedance Control

- Equalization control by setting the number of segments connected to each tap
- Termination control by setting the total number of enabled segments
- Disadvantages:
  - Transistor stacking in full-rate path
  - Extra area due to redundant segments
  - Extra power consumption because pre-driver should be sized to drive maximum load
  - Sensitive to P/N skew variations

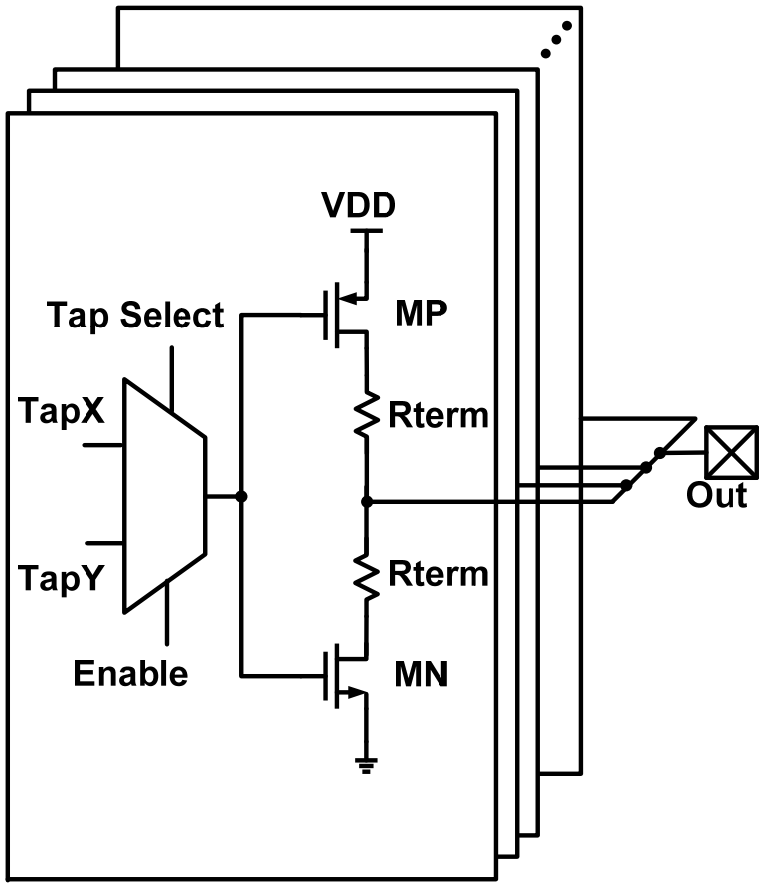

High-Swing Voltage-Mode Driver Hybrid Impedance Control Scheme

Analog Impedance Loop

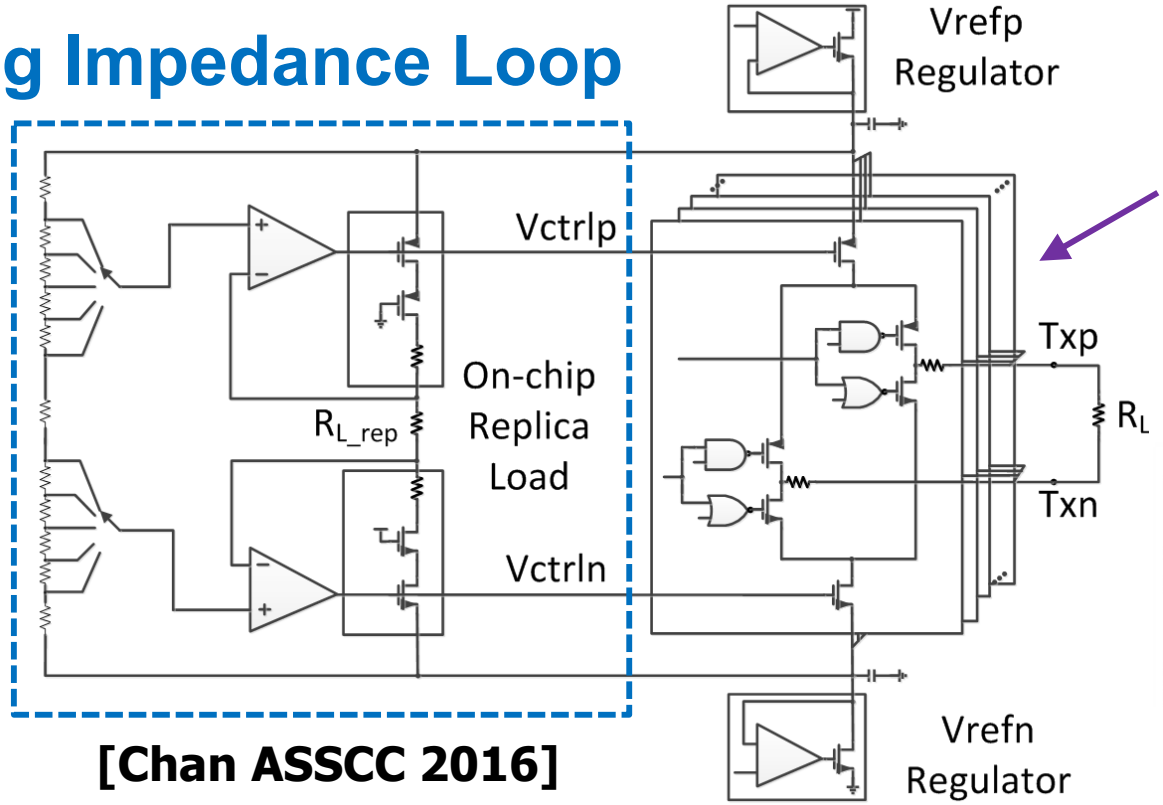

[Chan ASSCC 2016]

75 to 85 driver slices (10 programmable slices with NAND and NOR as pre-driver)

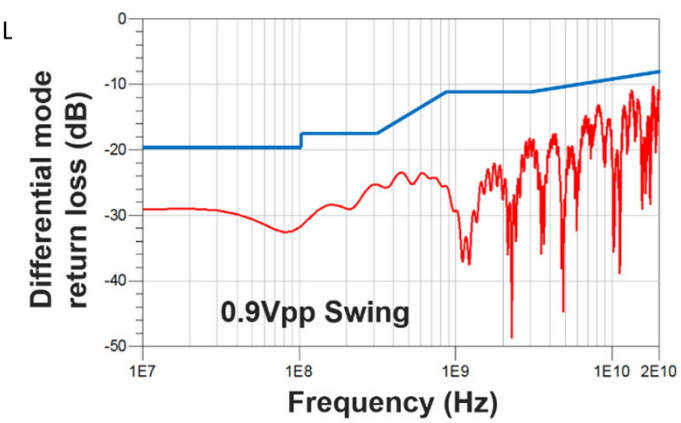

- Programmable number of driver slices provides coarse impedance control to compensate for resistor variations
- Analog impedance loop provides fine impedance control to compensate for NMOS/PMOS variations
- Measured differential mode return loss meets key protocols composite return loss mask

Current-Mode Driver Example

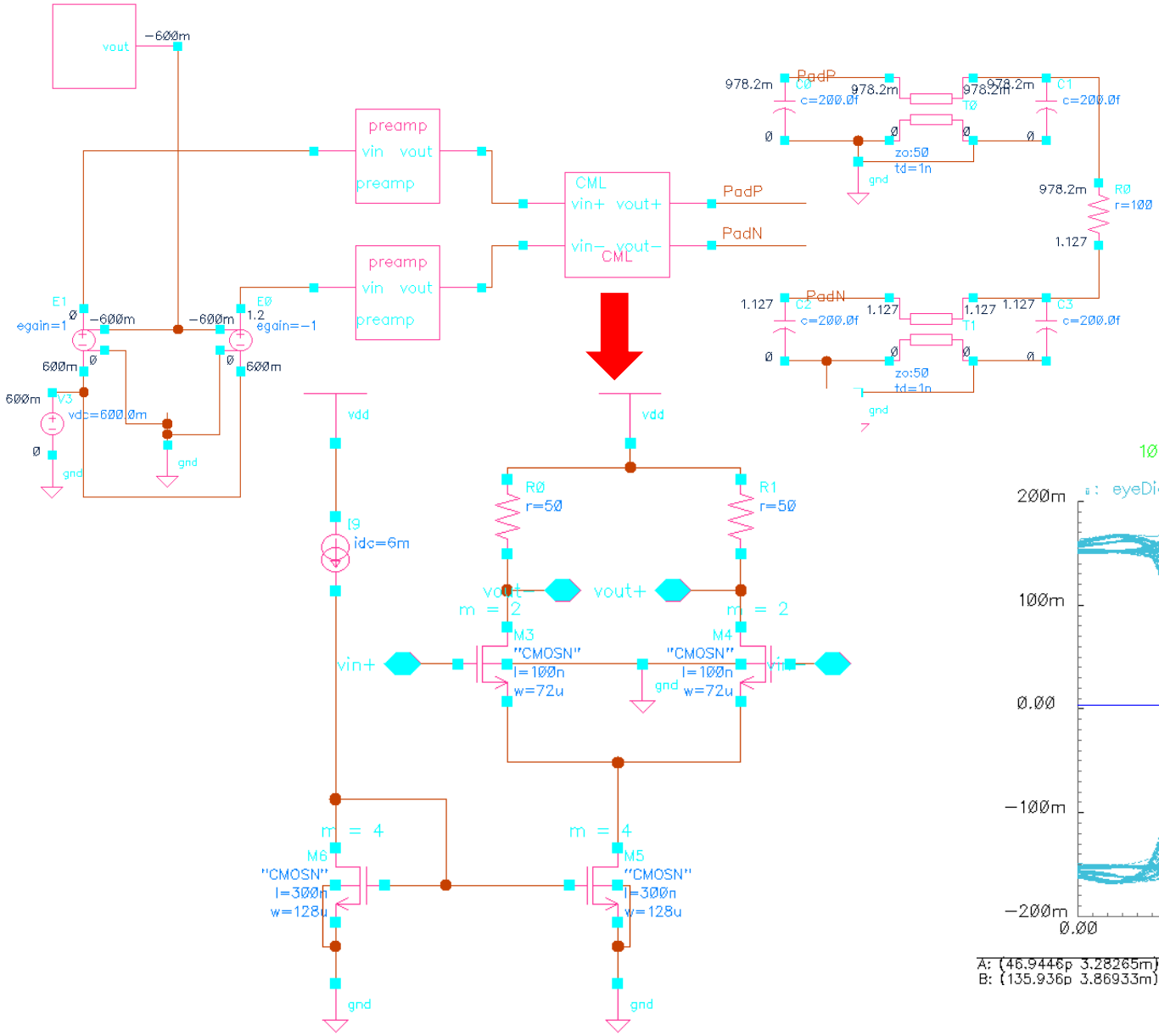

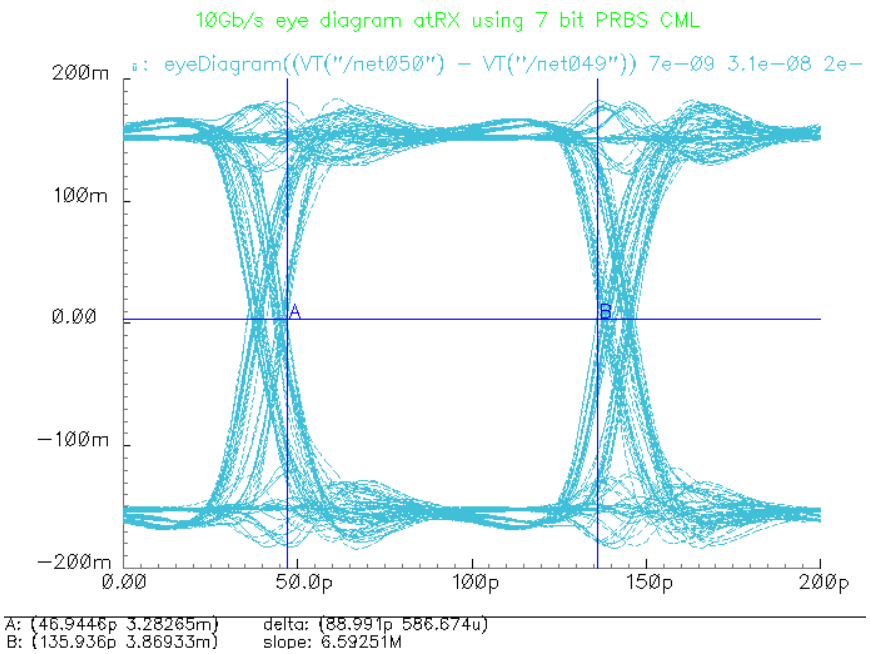

Voltage-Mode Driver Example

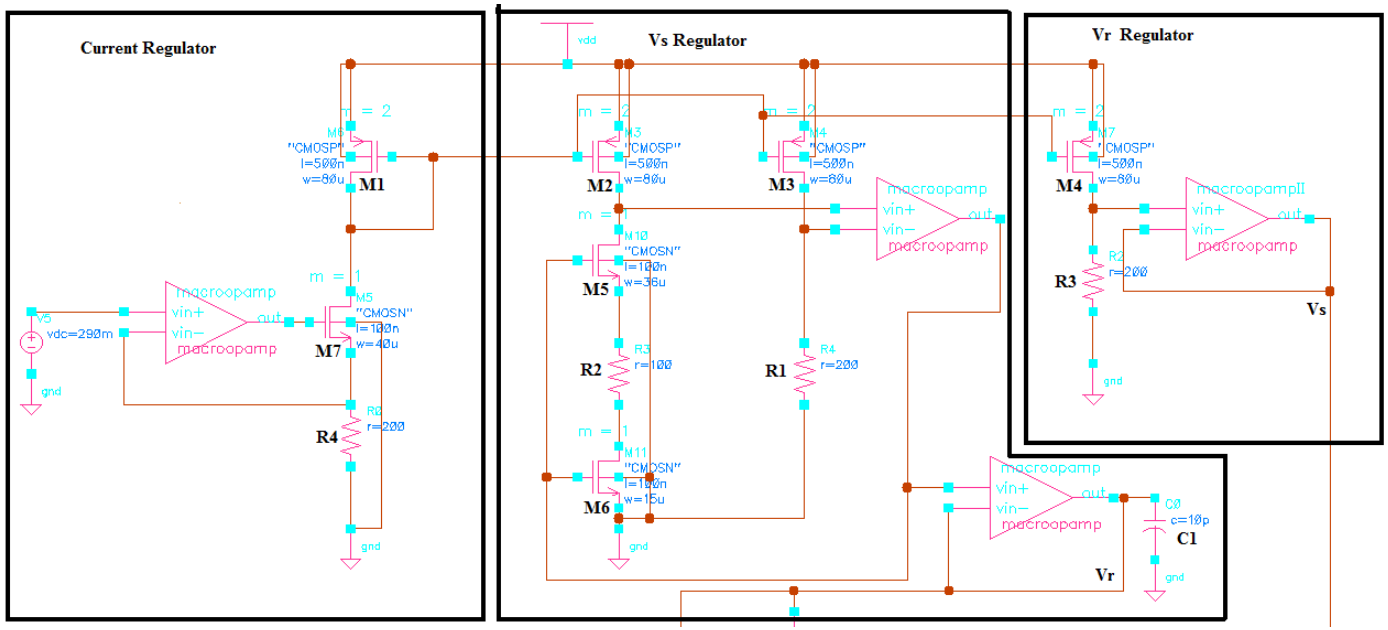

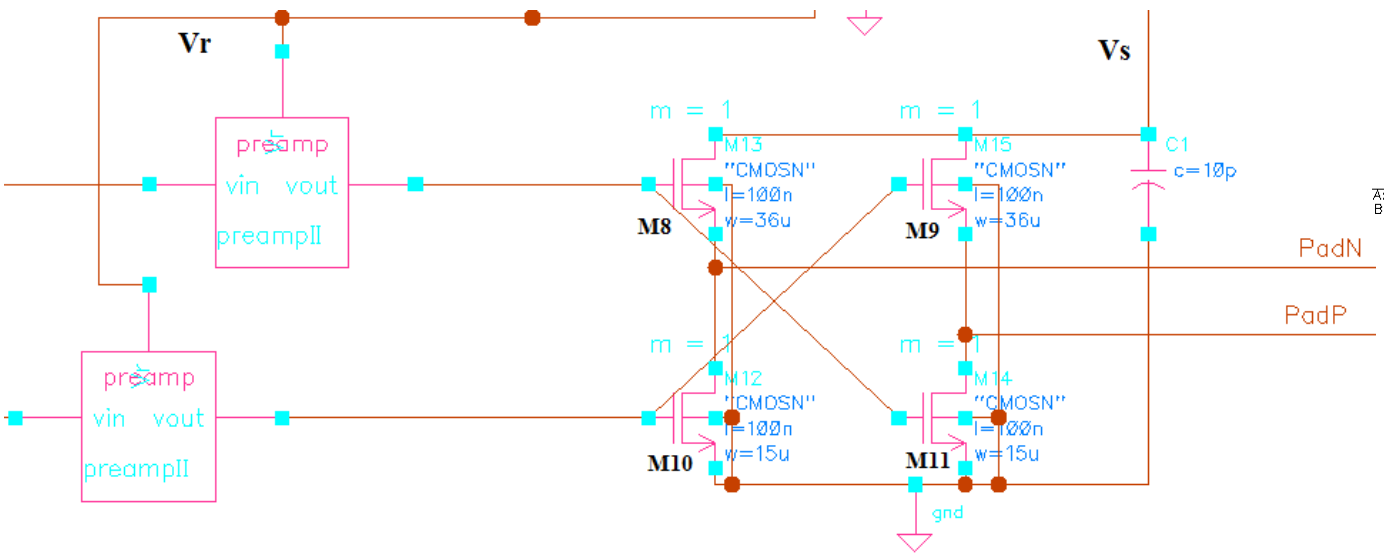

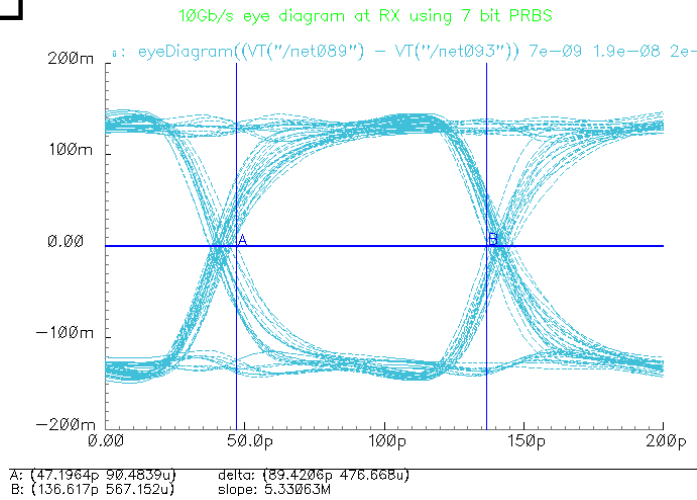

Agenda

- Common wireline modulation schemes
- Electrical transmitters
- Electrical channel issues & optical link motivation
- Optical channels & modulation techniques
- Optical transmitter circuits
  - Vertical-cavity surface-emitting laser (VCSEL)
  - Mach-Zehnder modulator (MZM)
  - Electro-absorption modulator (EAM)
  - Ring-resonator modulator (RRM)
- Conclusion

High-Speed Electrical Link System

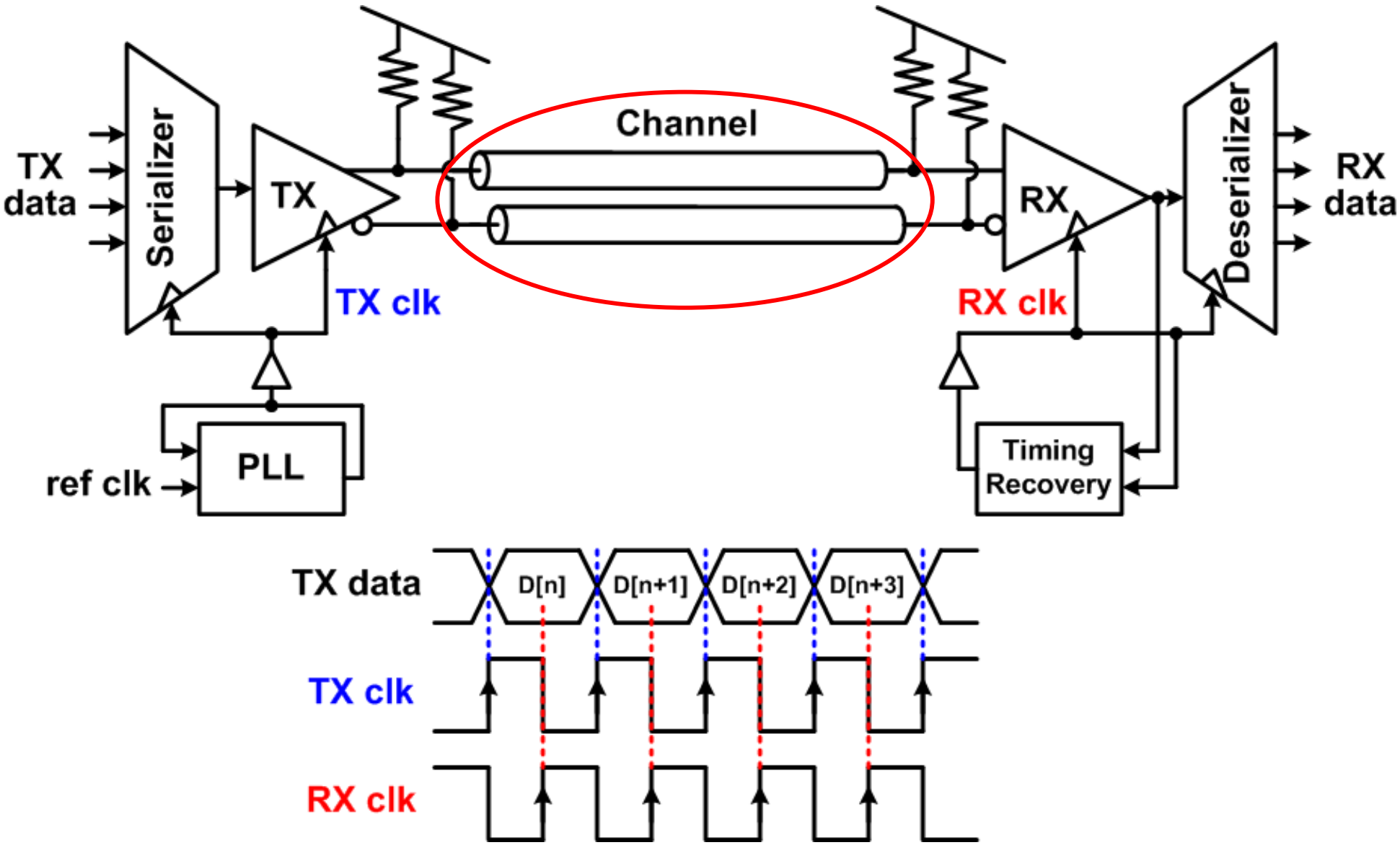

Electrical Backplane Channel

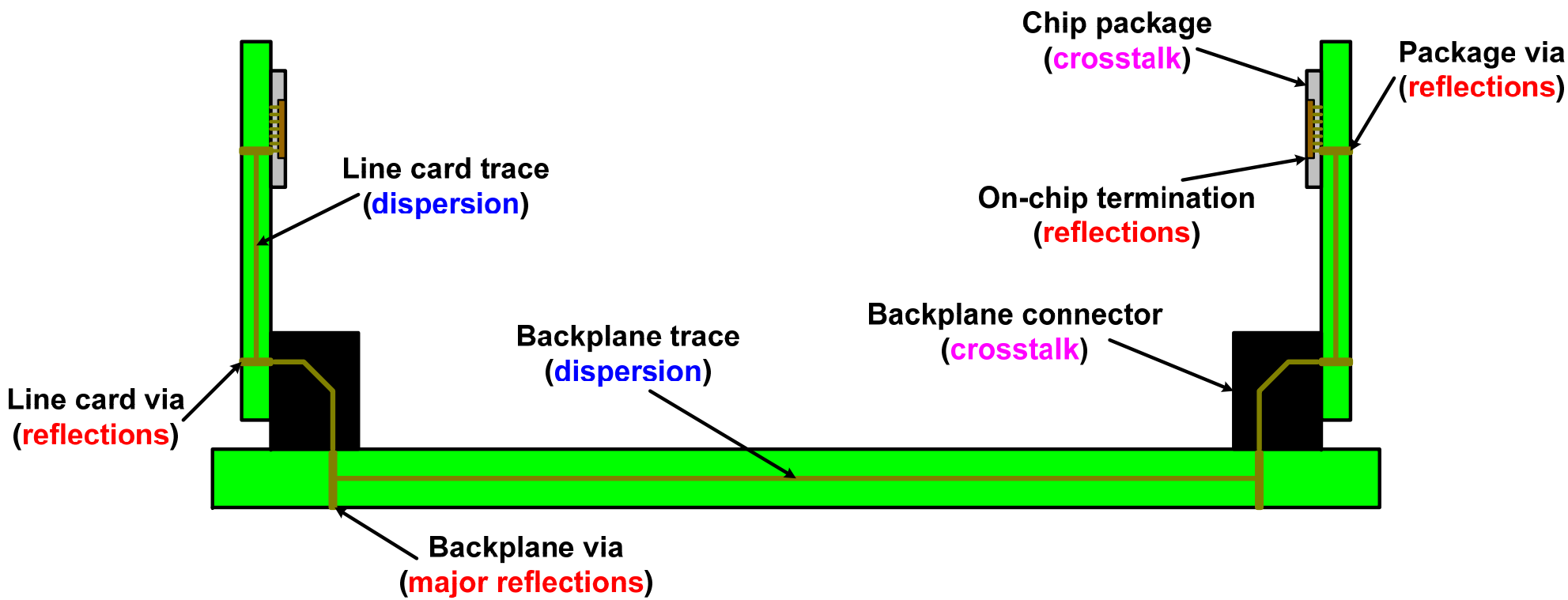

- Frequency dependent loss
  - Dispersion & reflections
- Co-channel interference
  - Far-end (FEXT) & near-end (NEXT) crosstalk

Channel Performance Impact

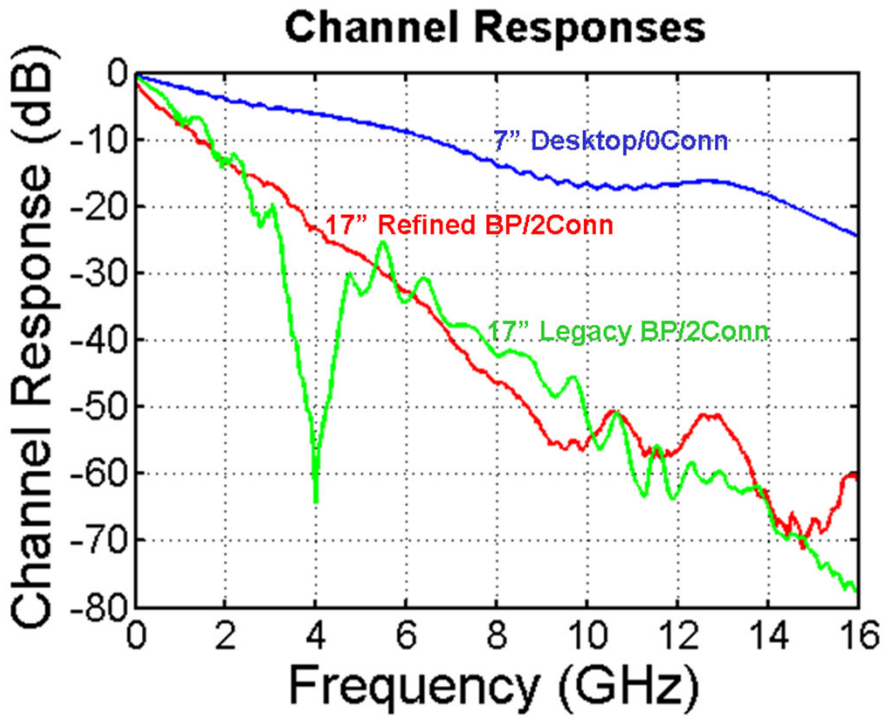

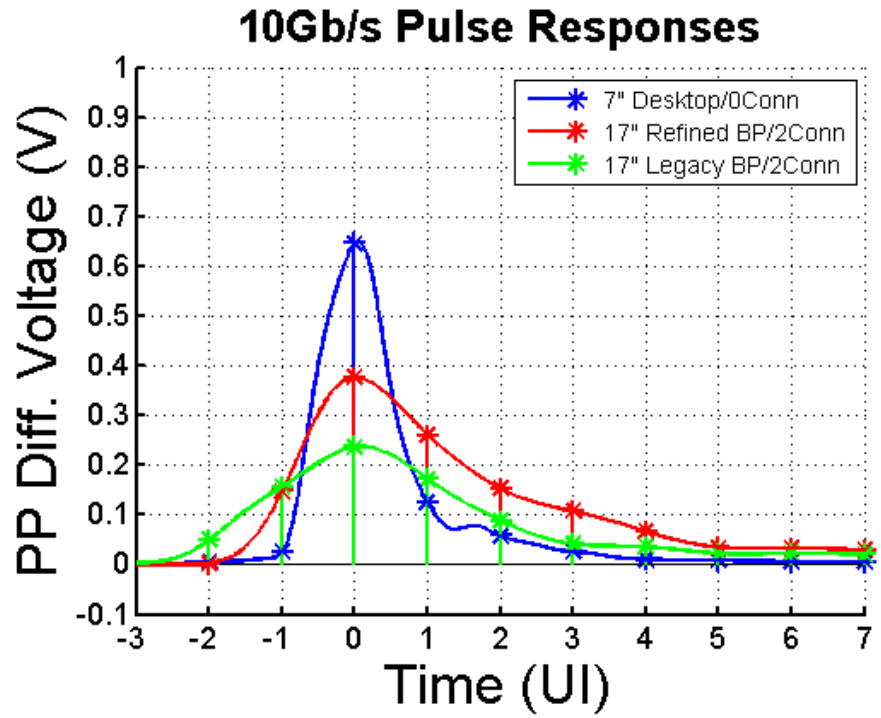

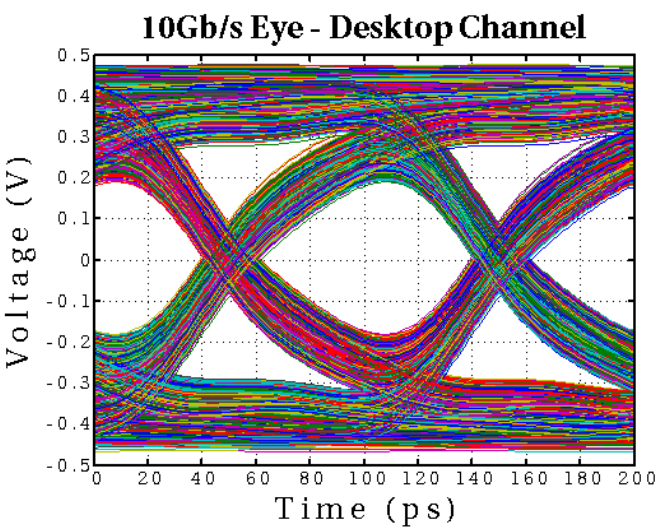

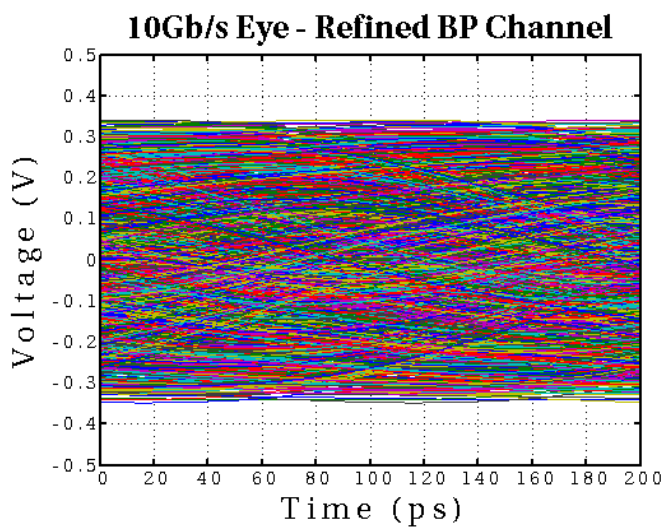

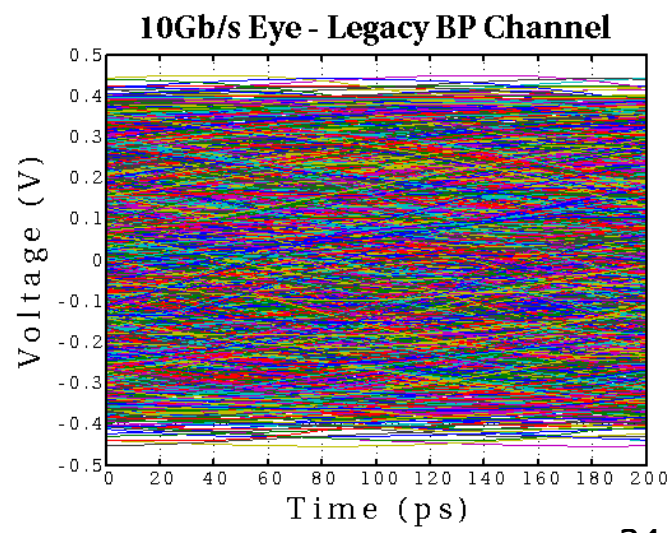

Link with Equalization

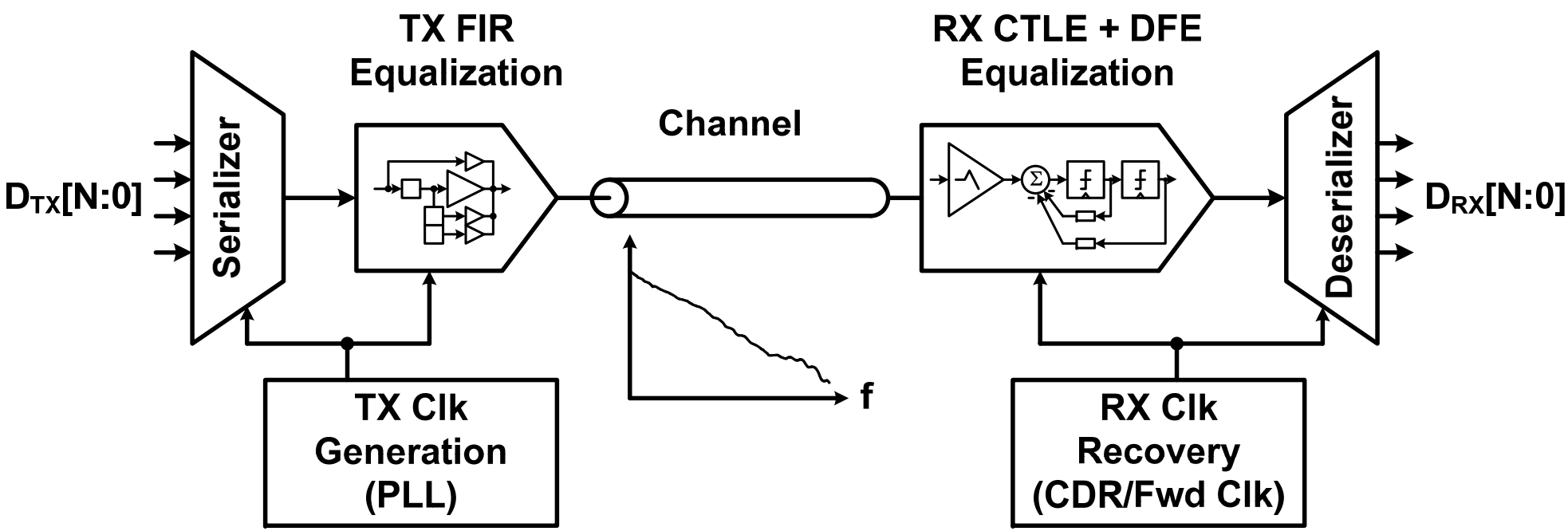

- A progressive combination of TX-side Finite-Impulse Response (FIR) filtering and RX-side Continuous-Time Linear Equalizers (CTLE) and Decision-Feedback Equalizers (DFE) is often employed to mitigate channel ISI

Channel Performance Impact

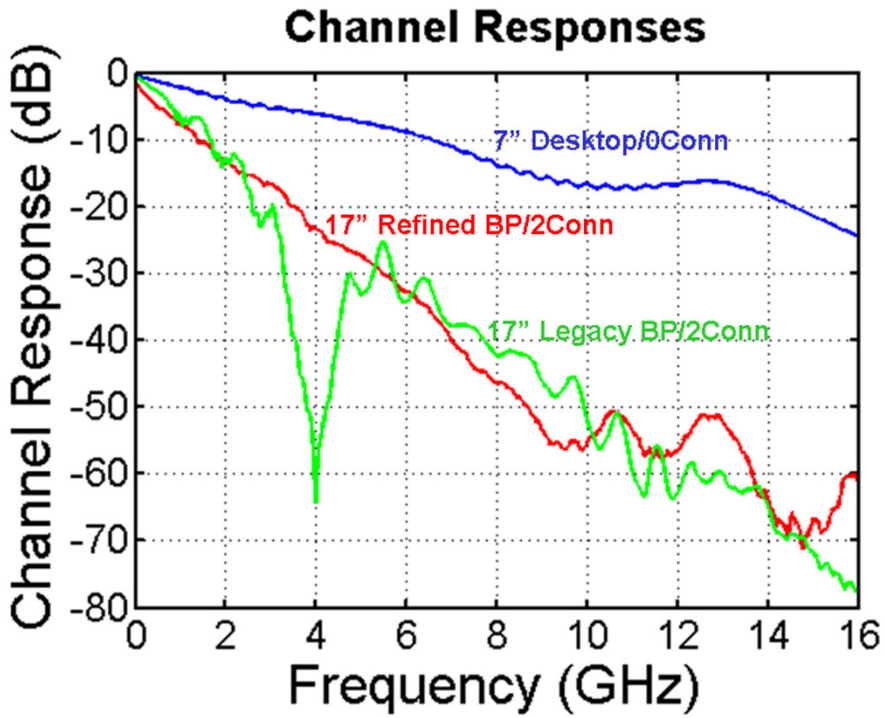

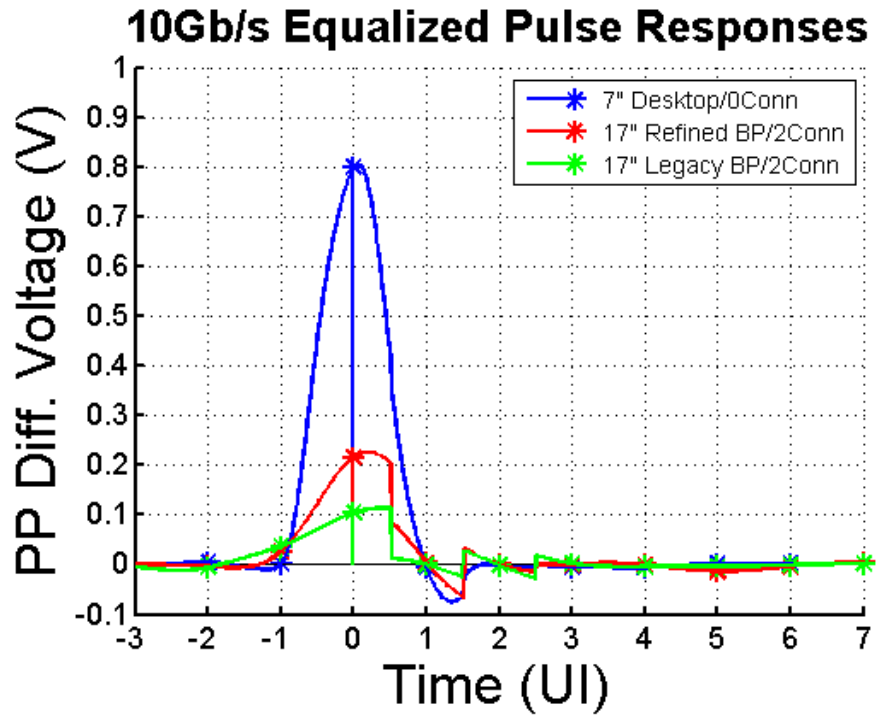

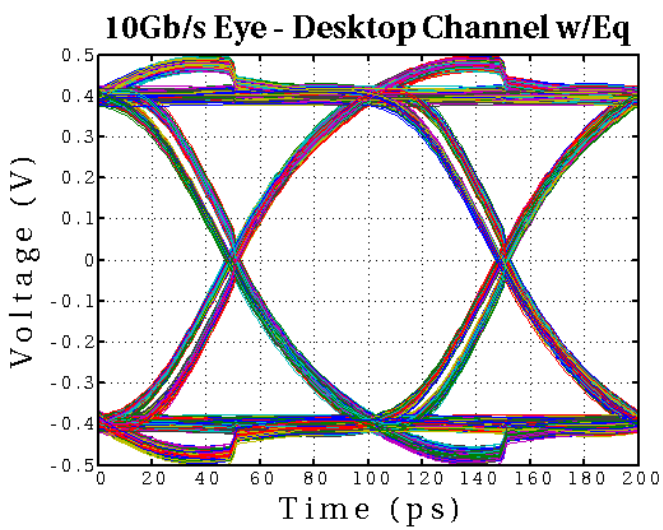

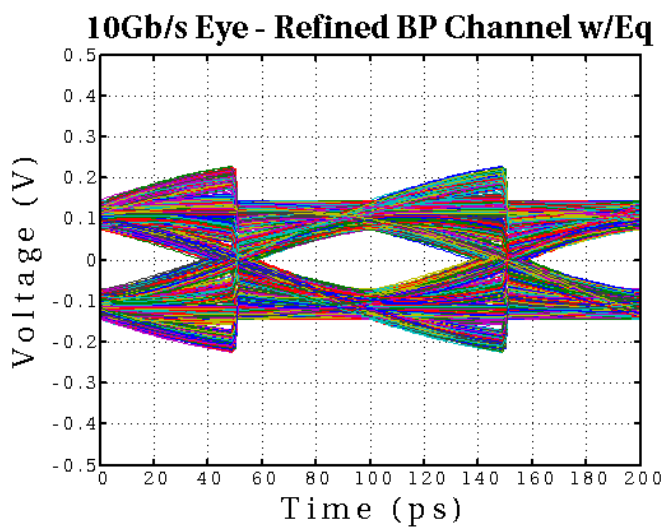

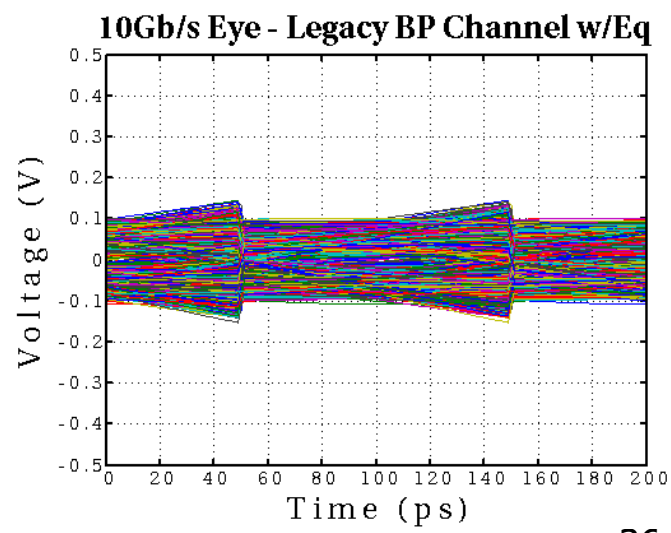

High-Speed Optical Link System

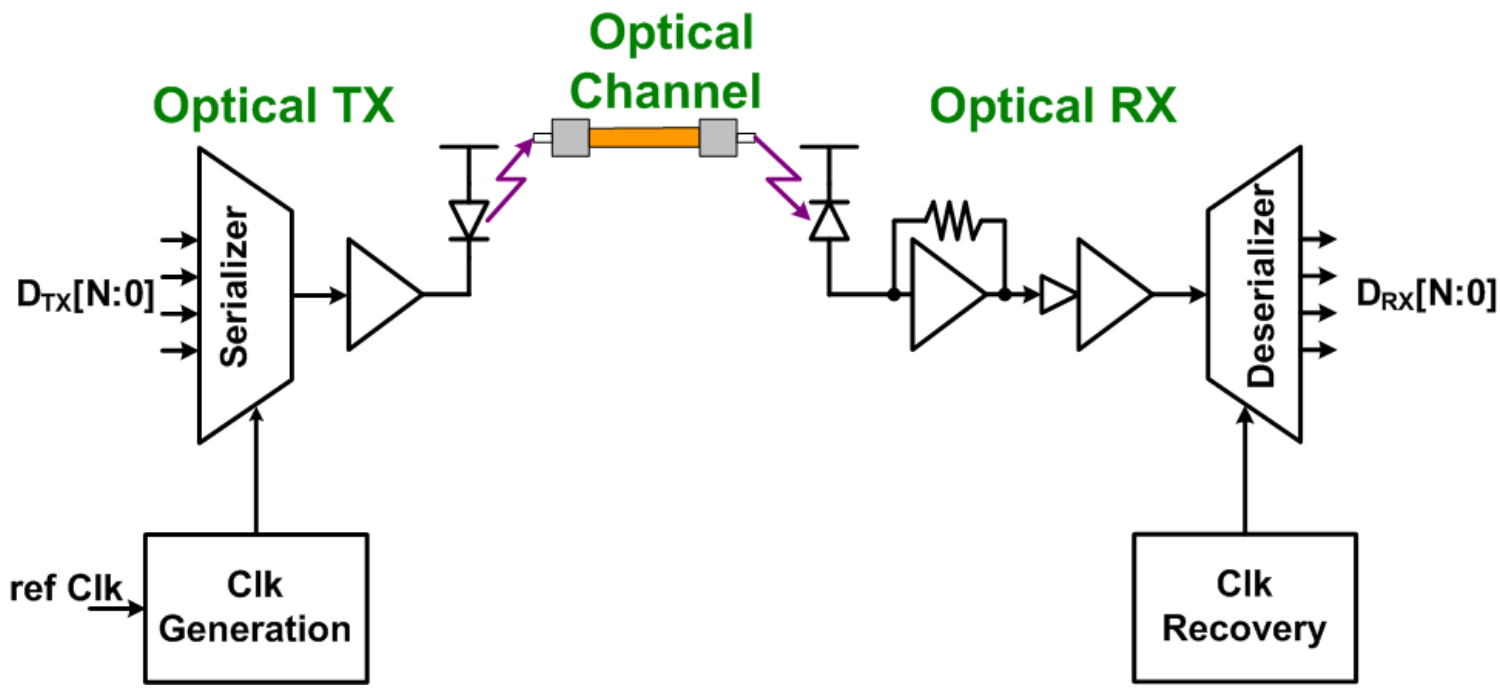

- Optical interconnects remove many channel limitations
  - Allows for dramatically longer reach
  - Potential for high information density with wavelength-division multiplexing (WDM)

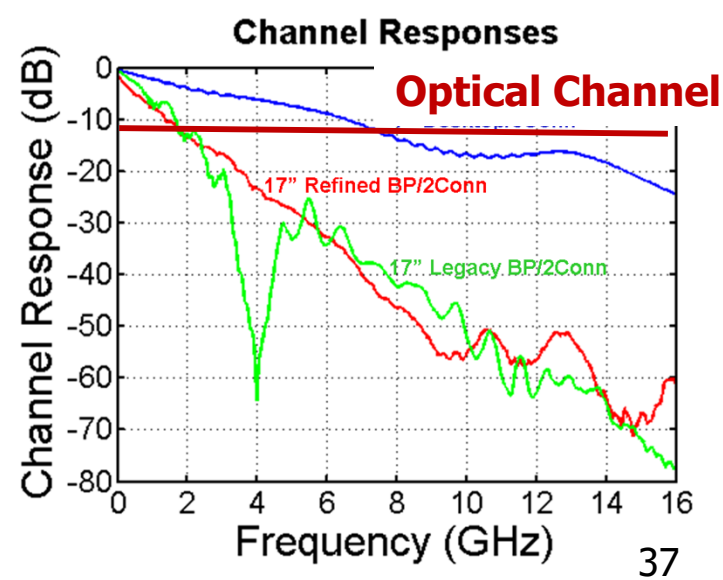

Data Center Links

- Different interconnect technologies are used to span various distances
- Electrical I/O
  - Chip-to-module
  - Intra-rack (DAC cables)
- Optical I/O
  - Intra-rack (AO cables)
  - TOR switch to edge switch

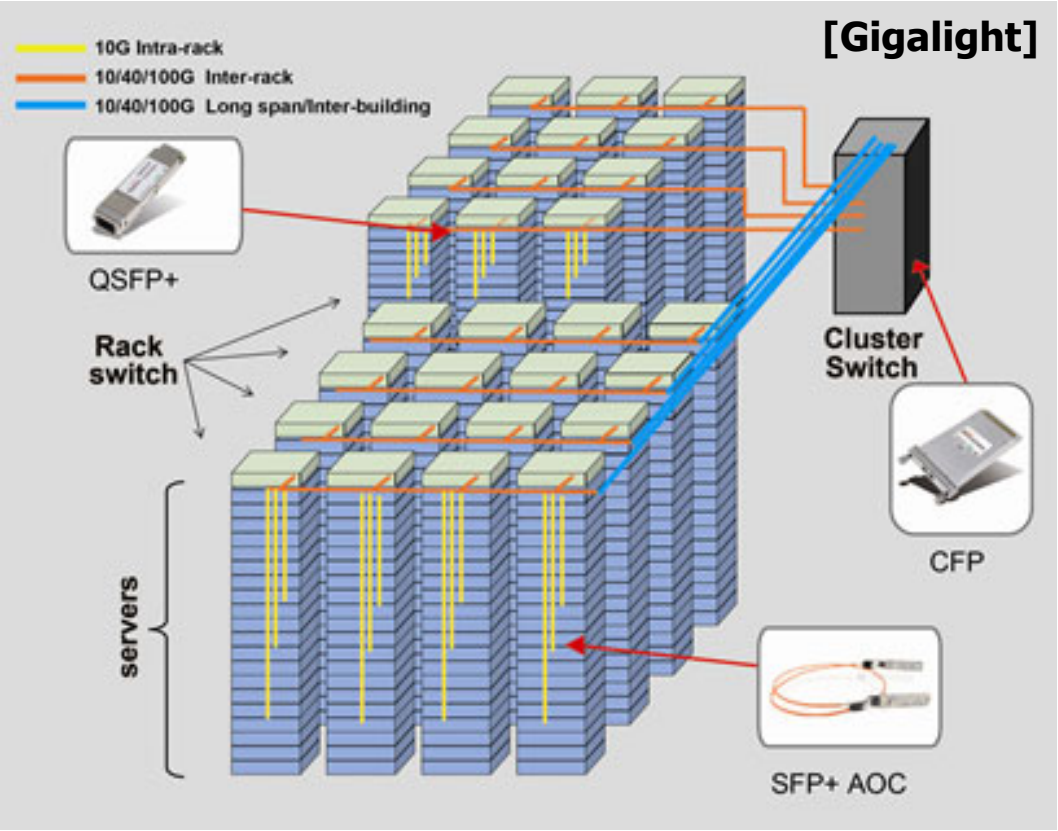

Data Center Link Length

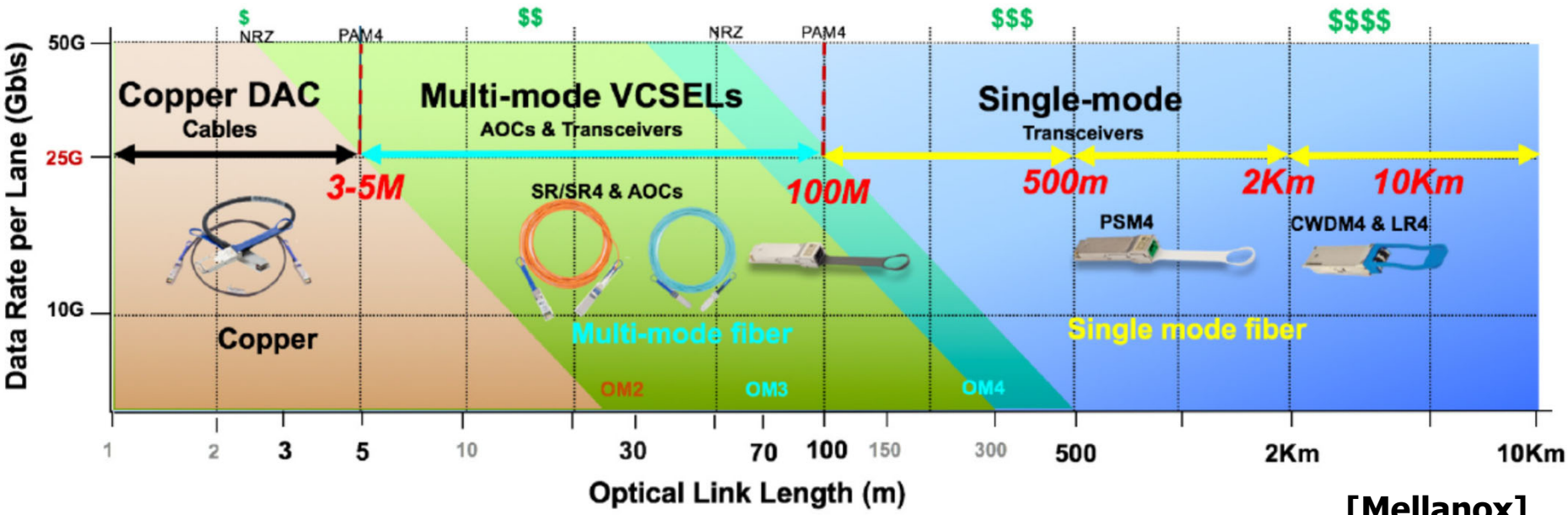

[Mellanox]

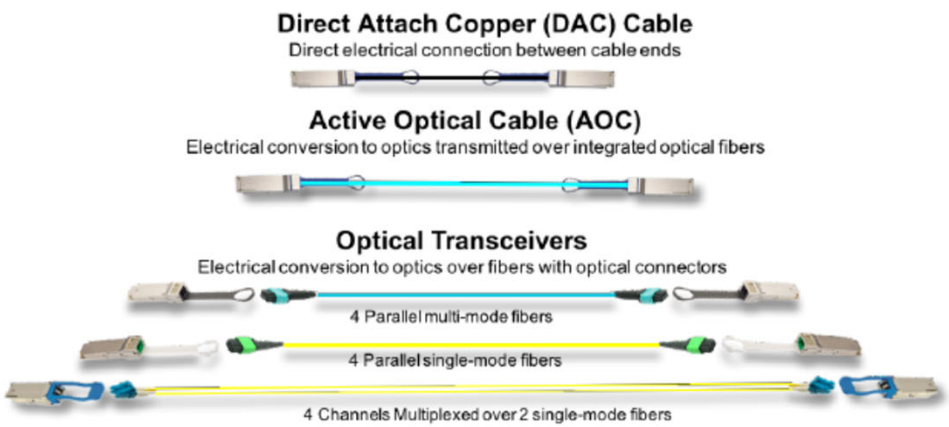

- Maximum reach scales inversely with data rate

Wavelength-Division Multiplexing (WDM)

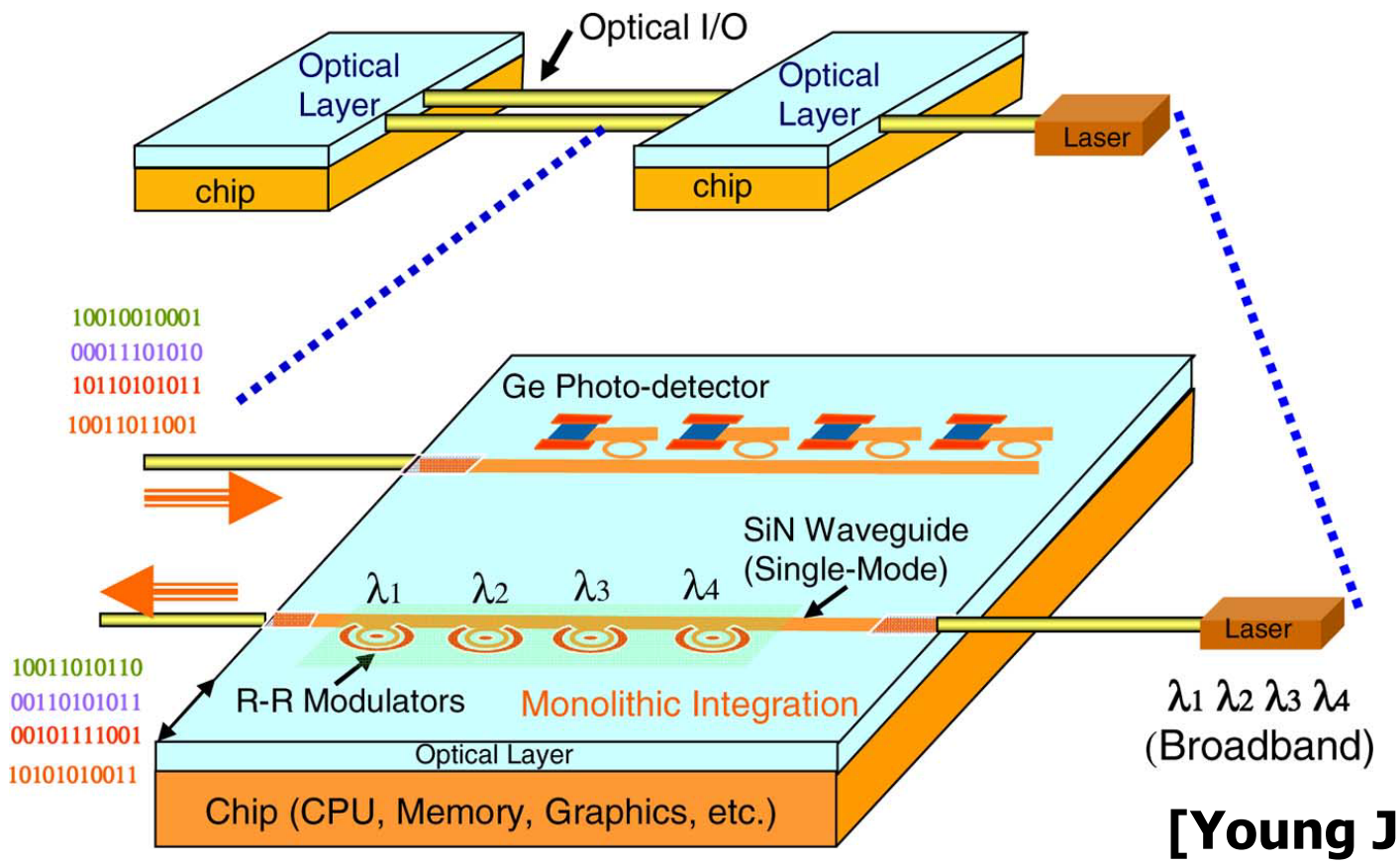

[Young JSSC 2010]

- WDM allows for multiple high-bandwidth (10+Gb/s) signals to be packed onto one optical channel

Agenda

- Common wireline modulation schemes
- Electrical transmitters
- Electrical channel issues & optical link motivation
- Optical channels & modulation techniques
- Optical transmitter circuits
  - Vertical-cavity surface-emitting laser (VCSEL)
  - Mach-Zehnder modulator (MZM)
  - Electro-absorption modulator (EAM)
  - Ring-resonator modulator (RRM)
- Conclusion

Optical Channels

- Short distance optical I/O channels are typically either waveguide (fiber)-based or free-space
- Optical channel advantages
  - Much lower loss
  - Lower cross-talk
  - Smaller waveguides relative to electrical traces
  - Potential for multiple data channels on single fiber via WDM

Optical Fiber Cross-Section

[FOA]

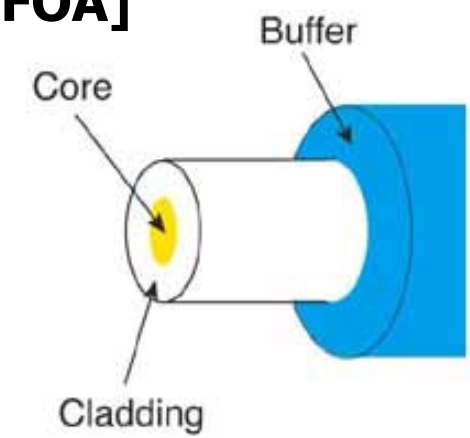

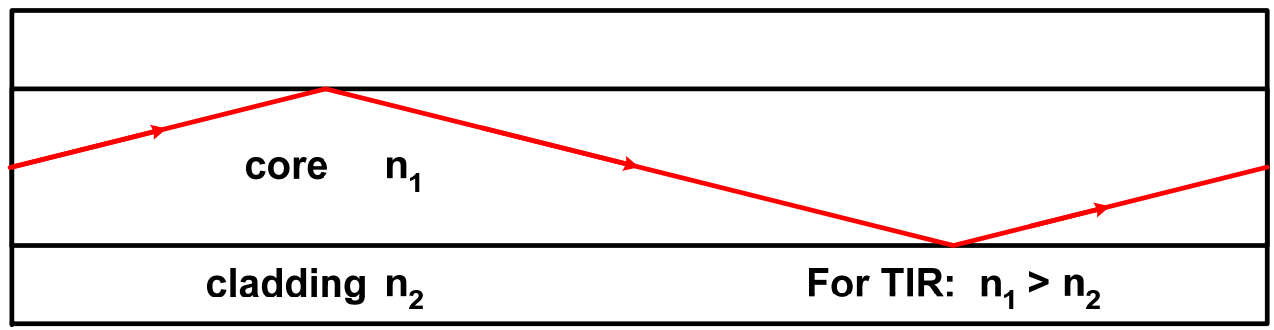

- Optical fibers confine light between a higher index core and a lower index cladding via total internal reflection

Silica Glass Fiber Loss

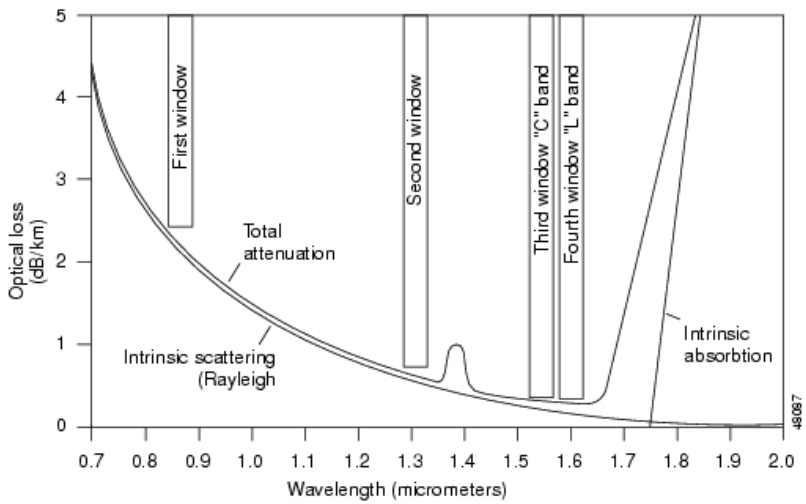

[Cisco]

- Scattering, absorption by material impurities, and other effects cause loss as the signal propagates down the fiber

- Optical fiber loss is specified in dB/**km**
  - Single-Mode Fiber loss ~0.25dB/km at 1550nm
  - RF coaxial cable loss ~500dB/km at 10GHz

Fiber Bandwidth and Dispersion

- While optical fiber has very wide bandwidth over which there is very low loss, there are still limits to high-speed communication

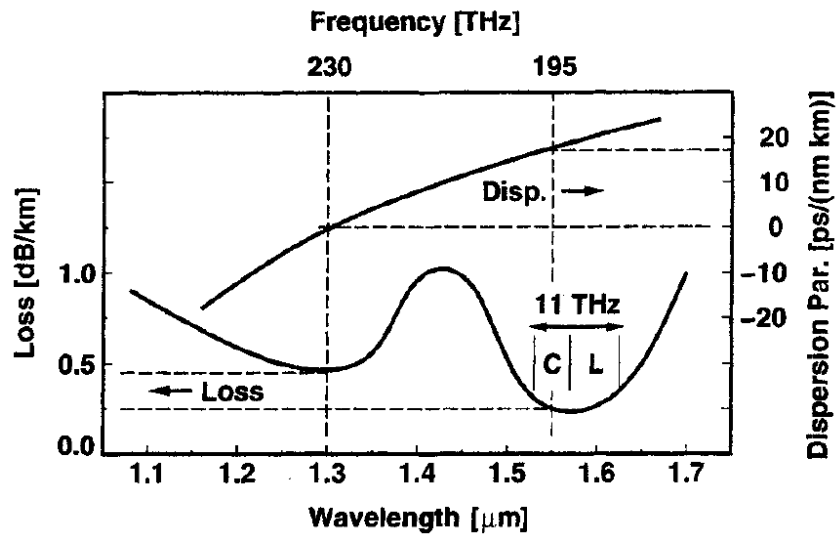

[Sackinger]

- Optical fiber can disperse a broadband signal, as different spectral components travel at different speeds

- This is Chromatic Dispersion

Two Fiber Bandwidths

- Optical Carrier Bandwidth
  - Assuming a spectrally-pure signal, this is large (11THz near 1550nm)
- Modulated Signal Bandwidth
  - This is often limited by chromatic dispersion
  - 1km of standard SMF is a few 10GHz with a laser linewidth of 1nm
- WDM can take advantage of the width carrier bandwidth with multiple carriers modulated at ~10Gb/s to achieve overall Tb/s communication

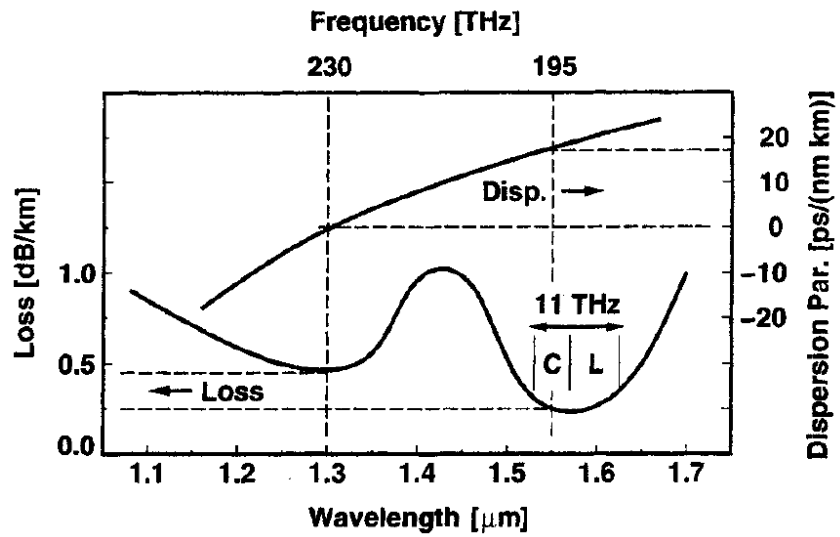

[Sackinger]

Optical Modulation Techniques

Direct Modulation

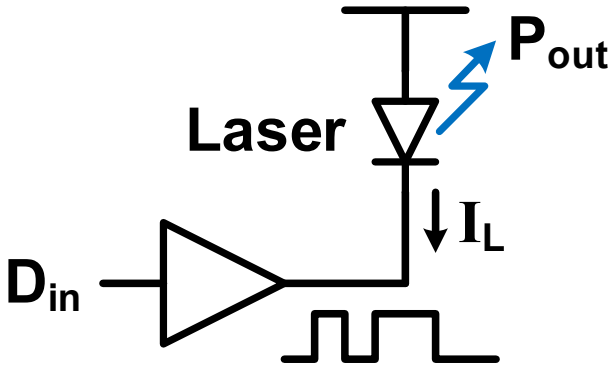

External Modulation

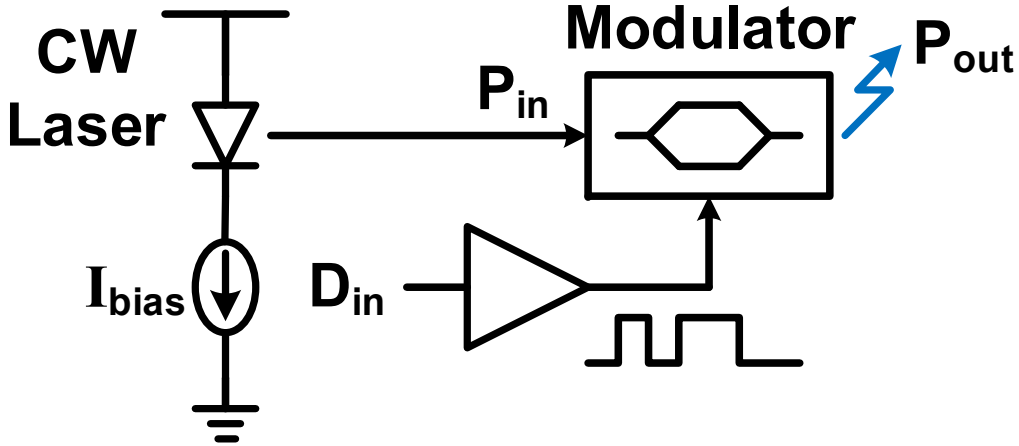

- Two modulation techniques
  - Direct modulation of laser
  - External modulation of continuous-wave (CW) "DC" laser with absorptive or refractive modulators

Directly Modulated Laser

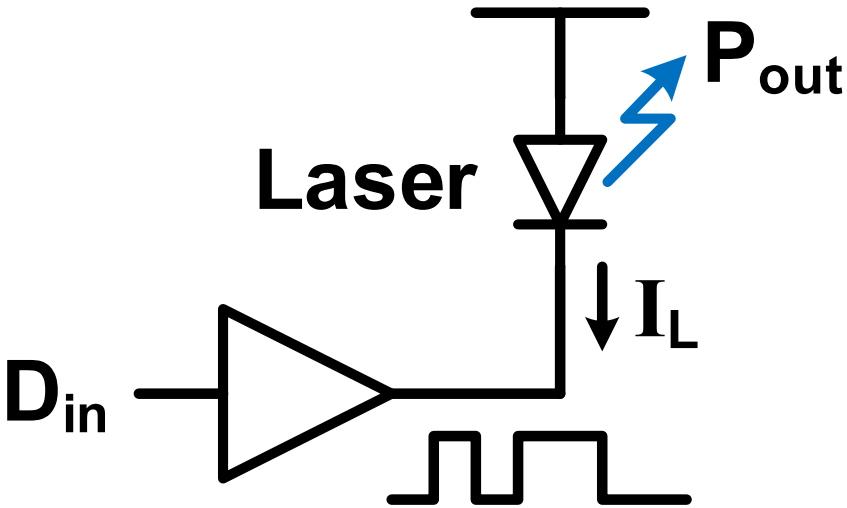

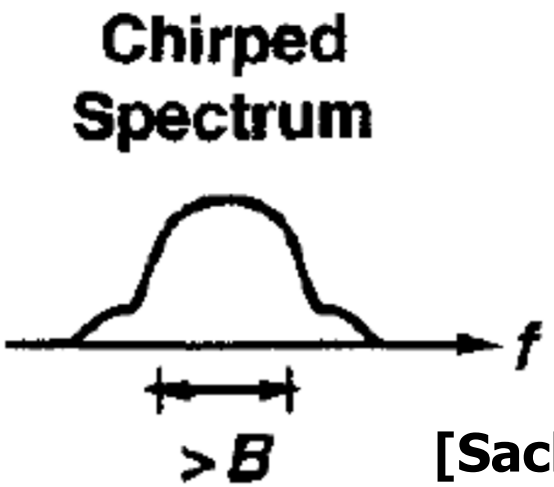

[Sackinger]

- Directly modulating laser output power
- Simplest approach
- Introduces laser "chirp", which is unwanted frequency (wavelength) modulation
- This chirp causes unwanted pulse dispersion when passed through a long fiber

Externally Modulated Laser

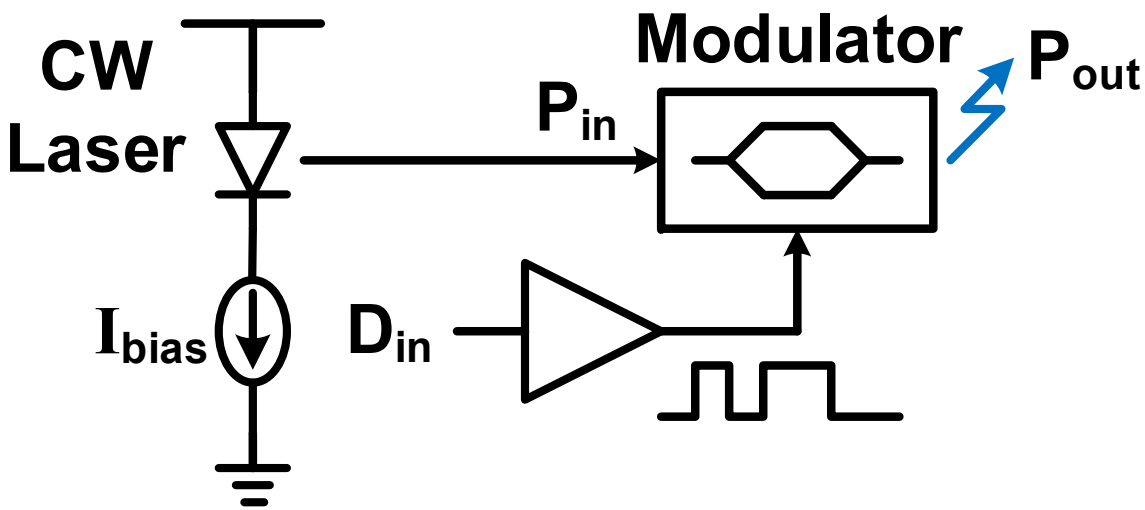

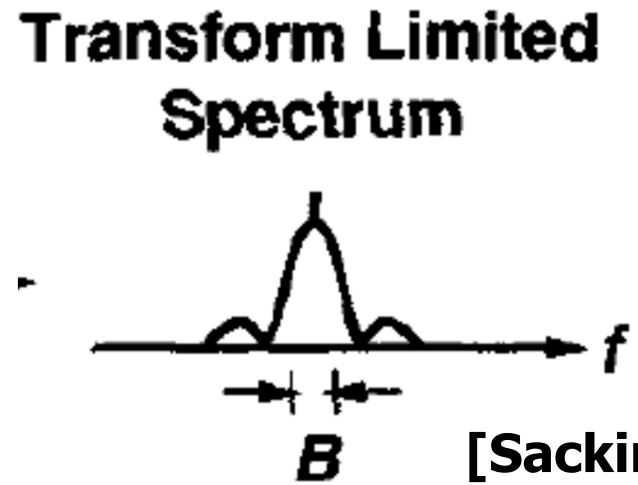

[Sackinger]

- External modulation of continuous-wave (CW) "DC" laser with absorptive or refractive modulators
  - Adds an extra component
  - Doesn't add chirp, and allows for a transform limited spectrum

Agenda

- Common wireline modulation schemes
- Electrical transmitters
- Electrical channel issues & optical link motivation
- Optical channels & modulation techniques
- Optical transmitter circuits
  - Vertical-cavity surface-emitting laser (VCSEL)
  - Mach-Zehnder modulator (MZM)
  - Electro-absorption modulator (EAM)
  - Ring-resonator modulator (RRM)
- Conclusion

What is a Laser?

[Fejer]

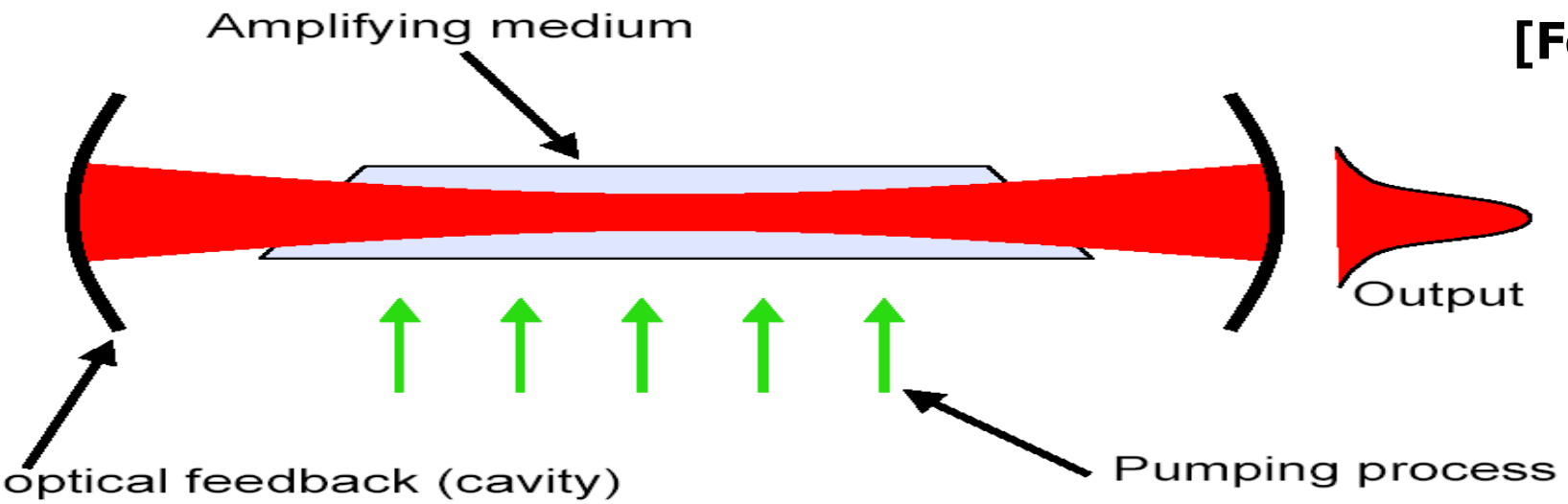

- **L**ight **A**mplification by **S**timulated **E**mission of **R**adiation
- **L**ight **O**scillation by **S**timulated **E**mission of **R**adiation
- Lasers are optical oscillators that emit coherent light through the process of stimulated emission
- 3 Elements in all lasers
  - Amplifying Medium
  - Pumping Process
  - Optical Feedback (Cavity)

Semiconductor Diode Lasers

[Verdeyen]

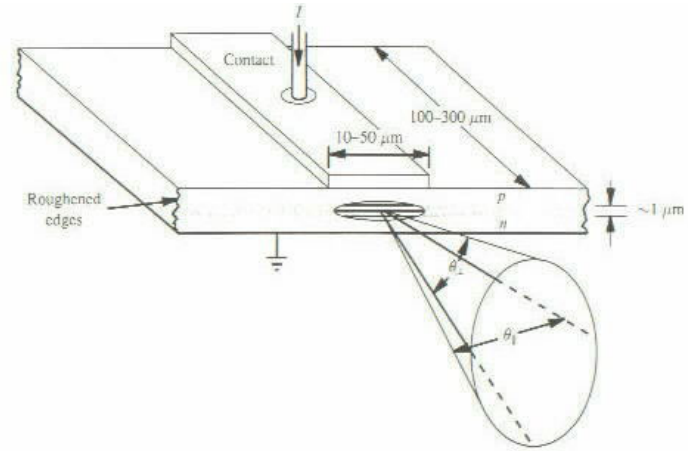

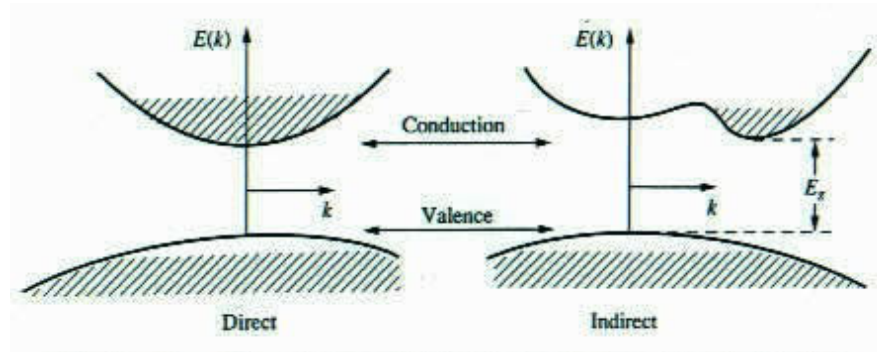

- Can be made with simple p-n junction
- Based on transitions between bands
  - Direct bandgap materials necessary
  - Si isn't ⇒ GaAs, InP
- Pumped electrically with current source
- Efficient device requires confinement of both carriers and photons
  - Leads to the use of heterostructures

Edge Emitters & VCSELs

- Edge Emitters
  - Advantage
    - Historically easier to manufacture
  - Disadvantages
    - Emit light in an elliptical mode
    - Higher testing and packaging costs

- VCSELs – Vertical Cavity Surface Emitting Lasers
  - Advantages
    - Can make 2-D arrays
    - Emit light in a circular output mode
    - Smaller device ⇒ Lower operating currents
    - Lower testing and packaging costs
  - Disadvantage
    - Hard to manufacture due to growth of high reflective mirrors

[Verdeyen]

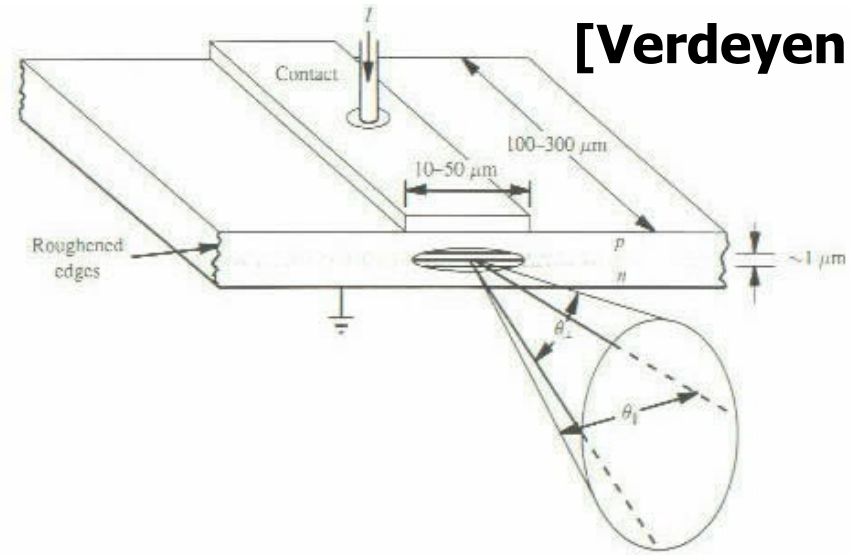

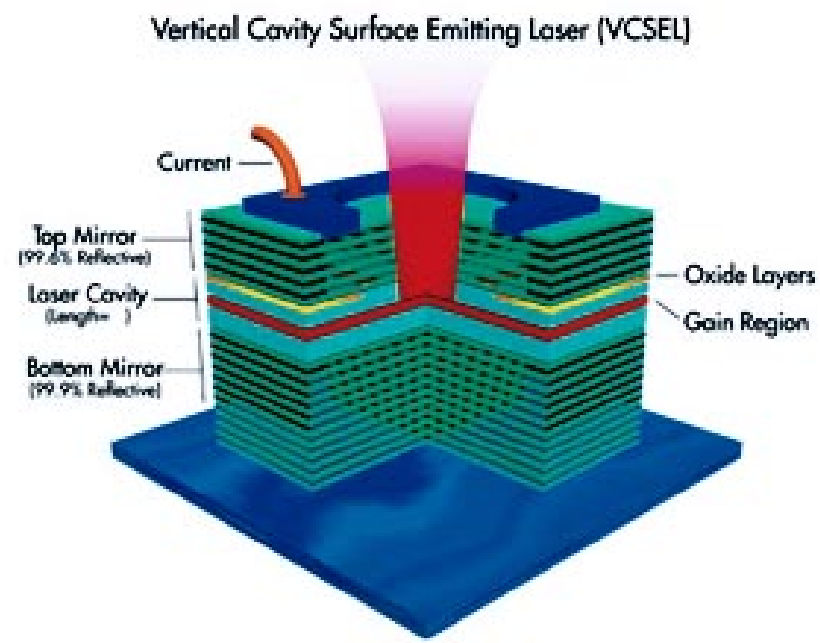

VCSEL Light-Current-Voltage (LIV) Curve

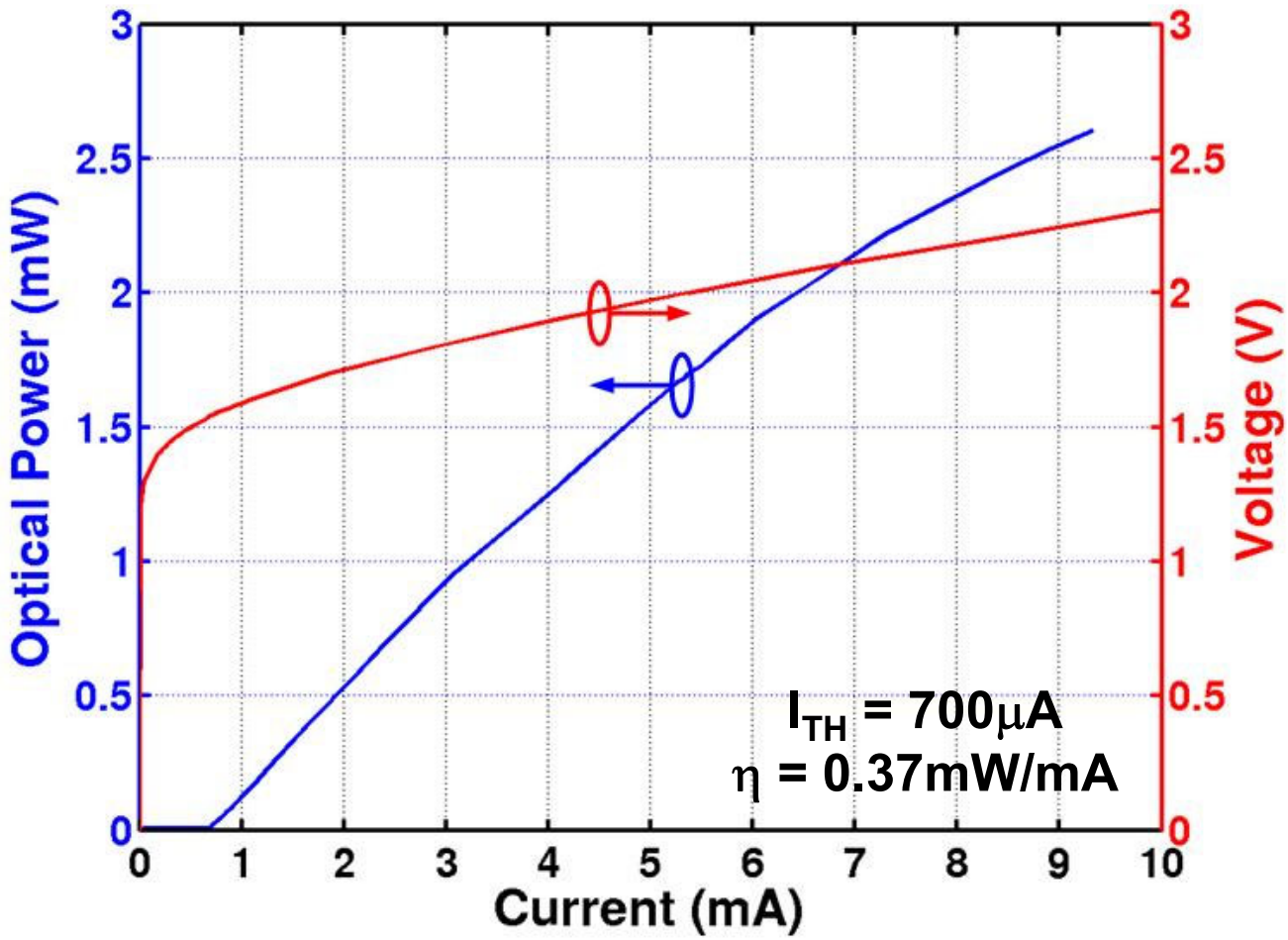

$$P_o = \eta\left(I - I_{TH}\right)$$

$$\text{Slope Efficiency } \eta = \frac{\Delta P}{\Delta I}\left(\frac{\text{W}}{\text{A}}\right)$$

VCSEL Model

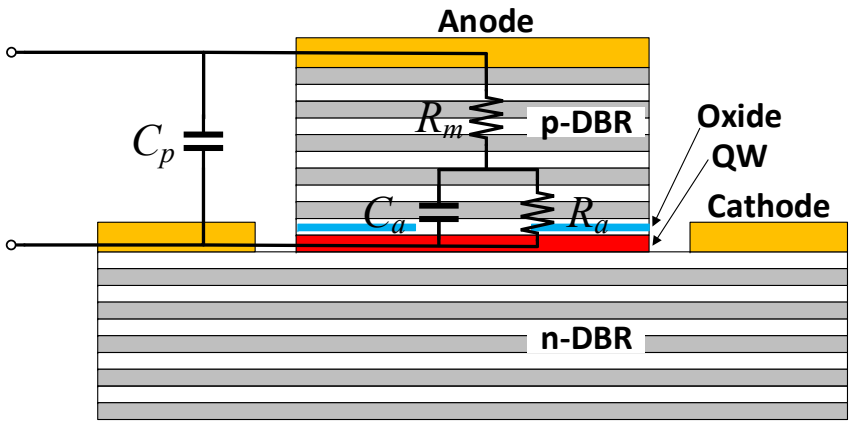

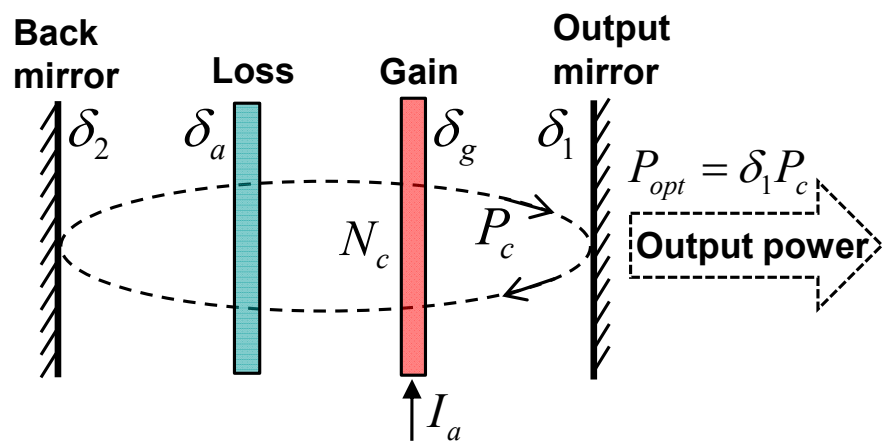

Electrical Input Stage

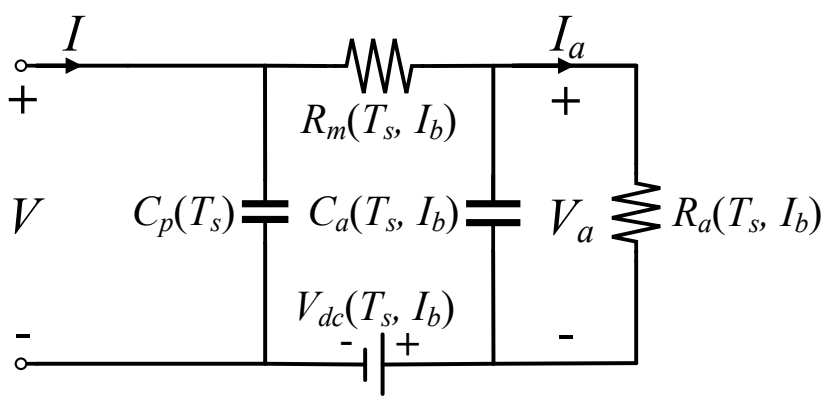

I_a

Optical Output Stage

$$\frac{dN_c}{dt} = \frac{\eta_i(T)\cdot\left[I_a - I_{th}(T)\right]}{q} - \delta_g(T)\cdot\frac{P_c}{h\nu}$$

$$\frac{dP_c}{dt} = \left[\delta_g(T) - \delta_c\right]\cdot\frac{P_c}{\tau_c} + P_{sp}(T)$$

$P_{opt} = \delta_1 P_c$

- Capture thermally-dependent electrical and optical dynamics
- Provide dc, small signal, and large-signal simulation capabilities

Temperature-Dependent Performance

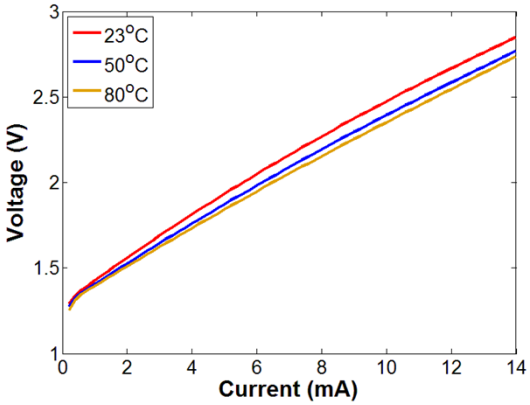

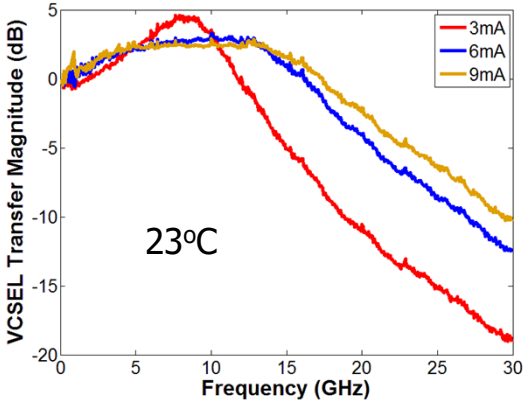

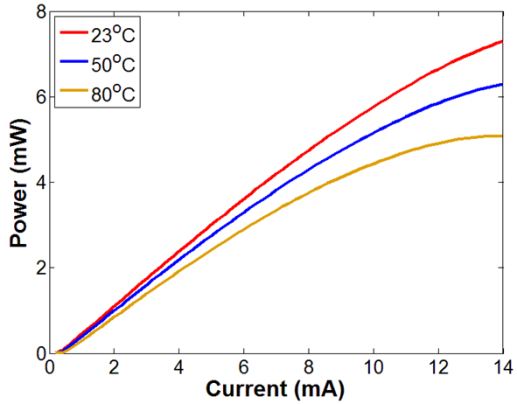

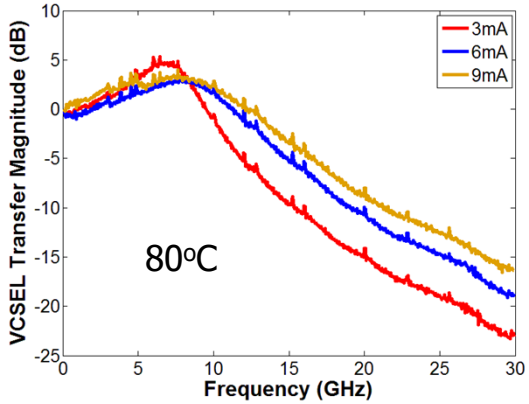

25Gb/s

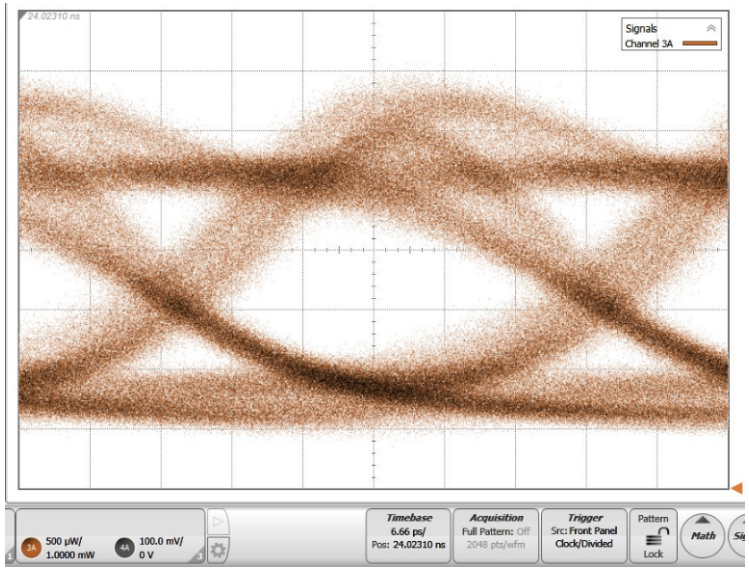

- Optical power-current-voltage (L-I-V) response is temperature-dependent
- Bandwidth is bias and temperature dependent

Measured & Simulated 25Gb/s Eye Diagrams

T_s=23°C

T_s=80°C

I_b=4mA

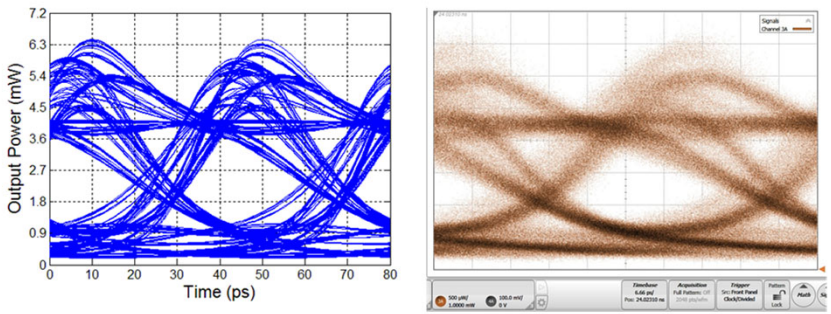

I_b=4mA

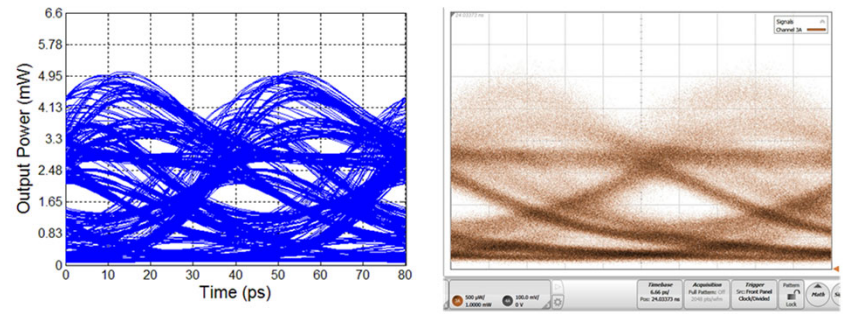

I_b=5mA

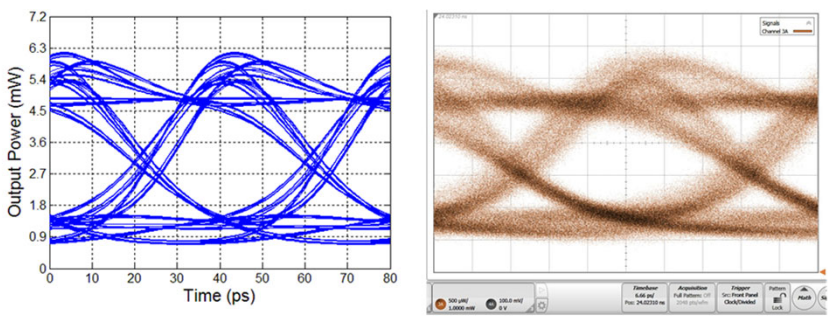

I_b=5mA

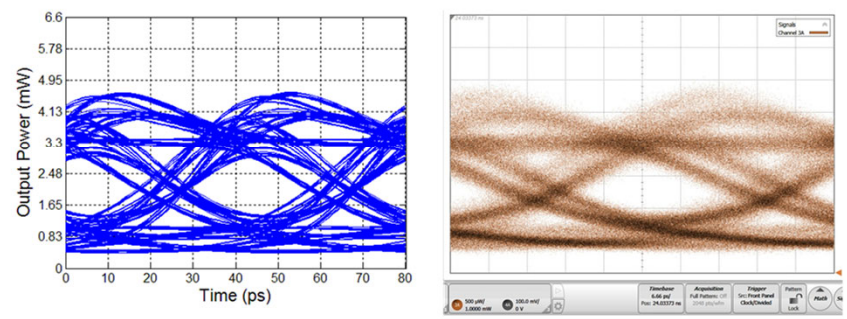

I_b=6mA

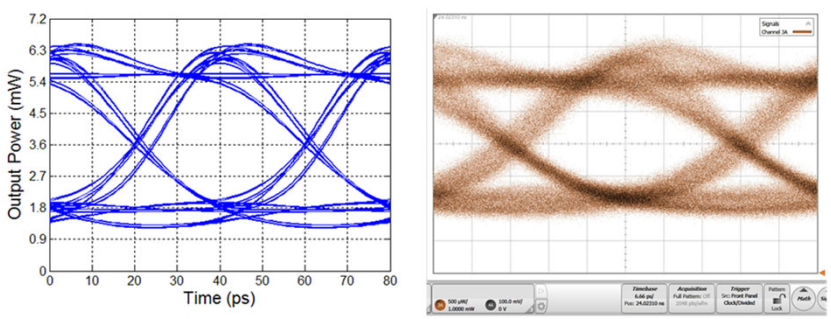

I_b=6mA

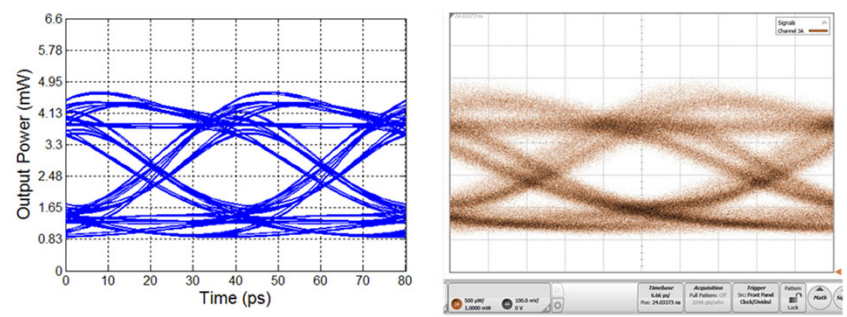

Laser Drivers

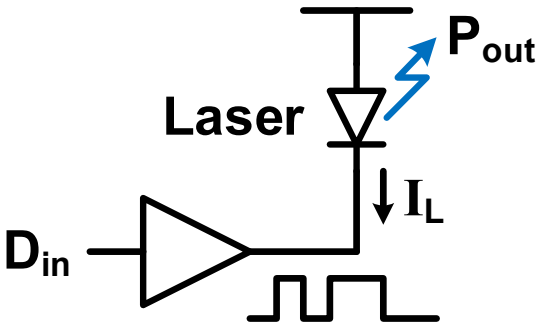

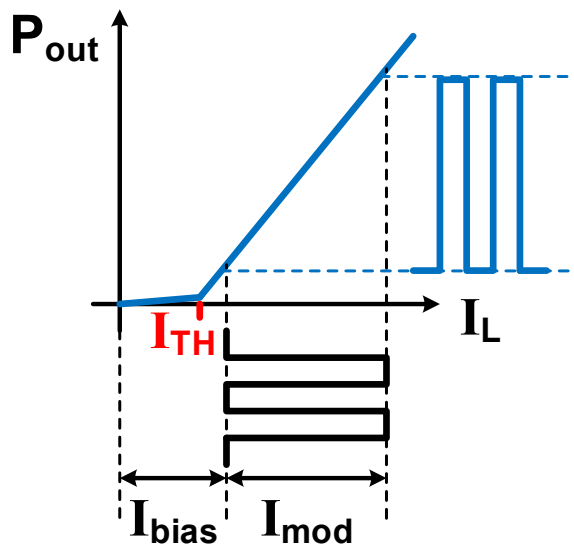

Current-Mode VCSEL Driver

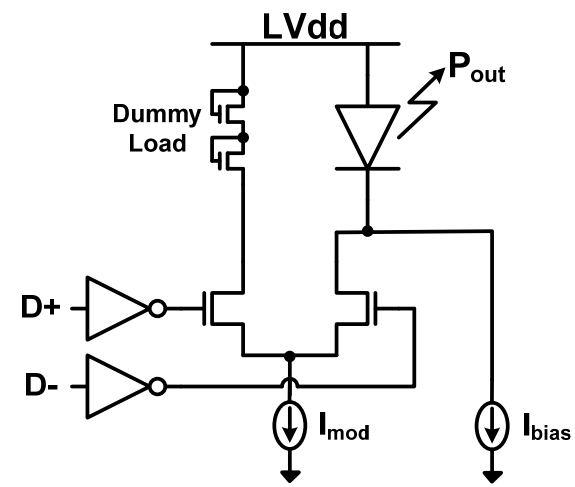

- Current-mode drivers are often used due to the laser's linear L-I relationship

- In addition to the high-speed modulation current I_{mod}, laser drivers must also supply a bias current I_{bias} to ensure a minimum frequency response and/or eliminate turn-on delay

25Gb/s VCSEL Link

[Proesel ISSCC 2012]

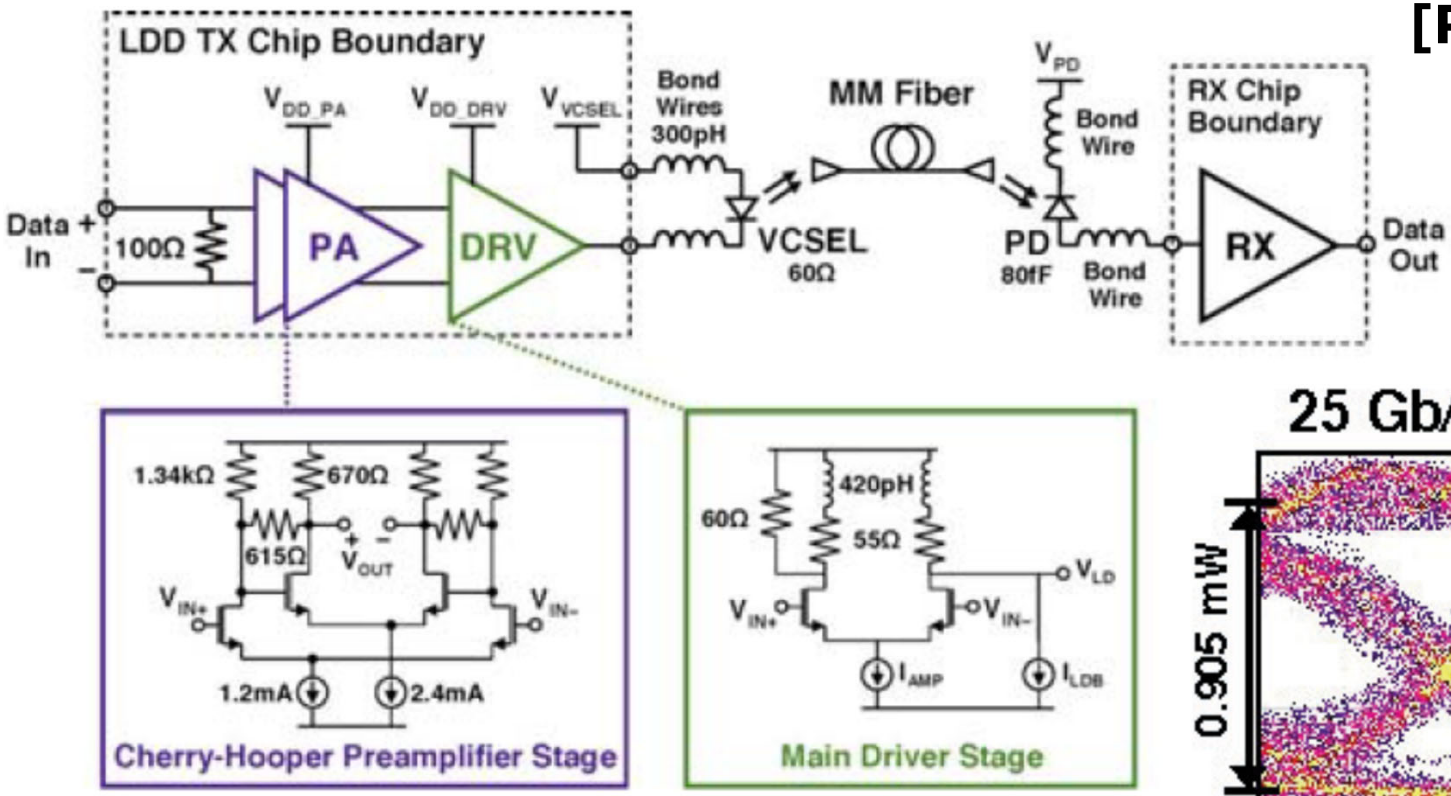

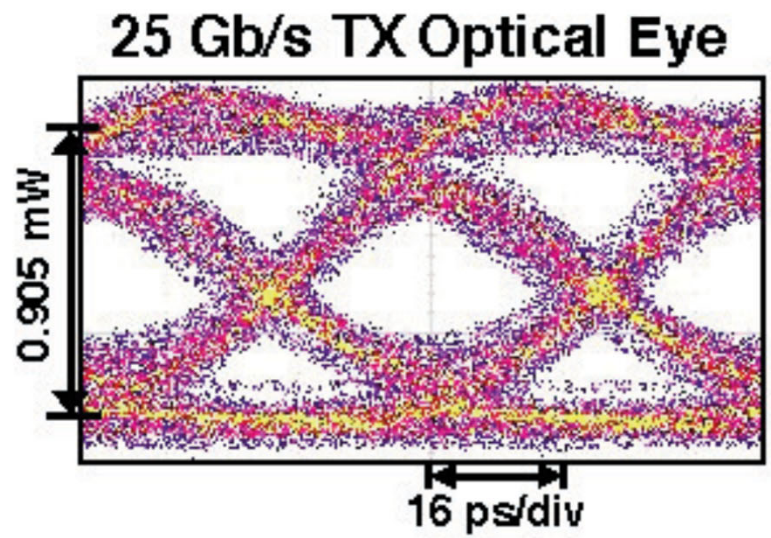

- Current-mode output driver
- Bandwidth extension achieved with on-die shunt-peaking termination in the output stage and with Cherry-Hooper preamplifier stage

Multiplexing FIR Output Driver

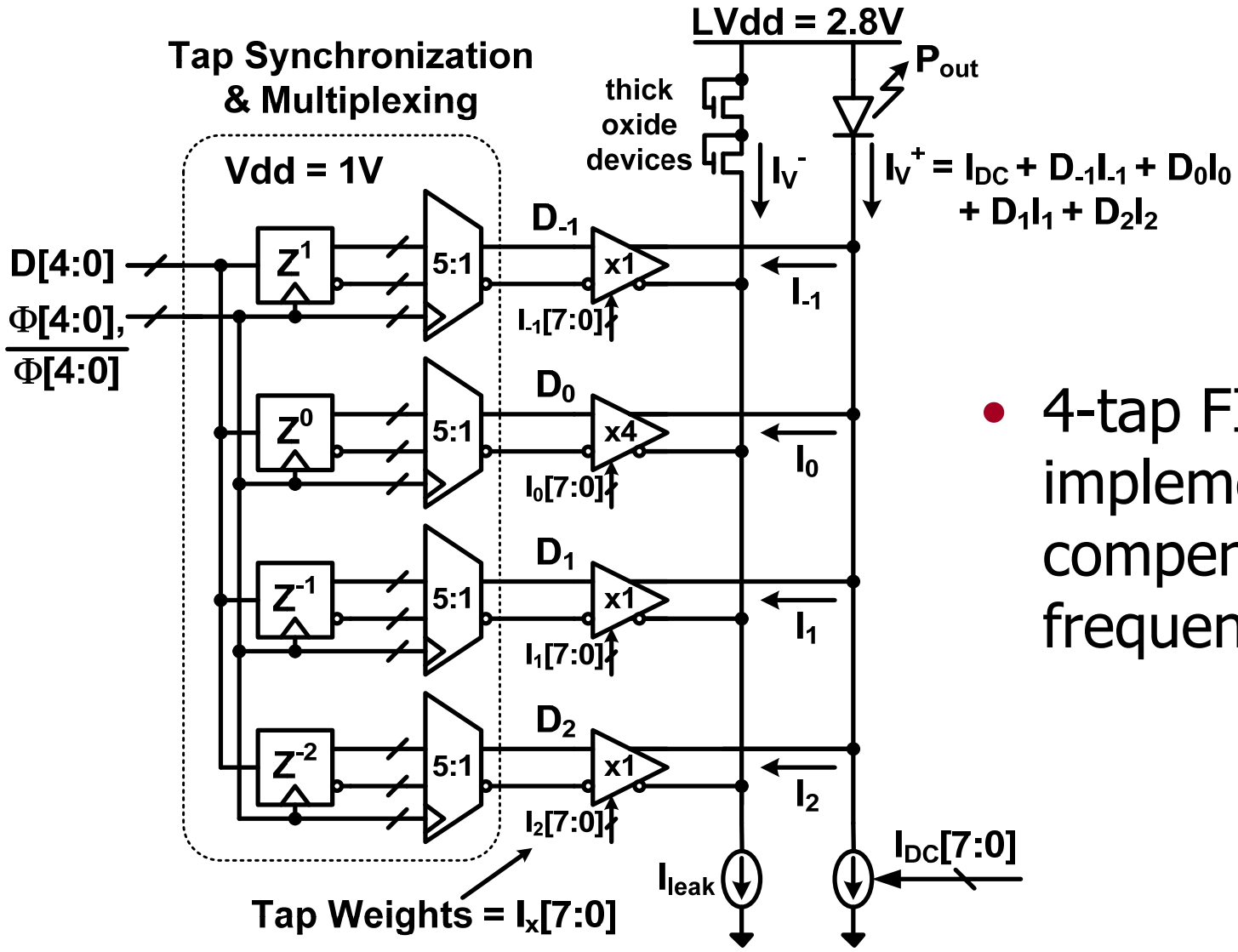

- 4-tap FIR filter implemented in driver to compensate for VCSEL frequency response

[Palermo ESSCIRC 2006]

VCSEL TX Optical Testing

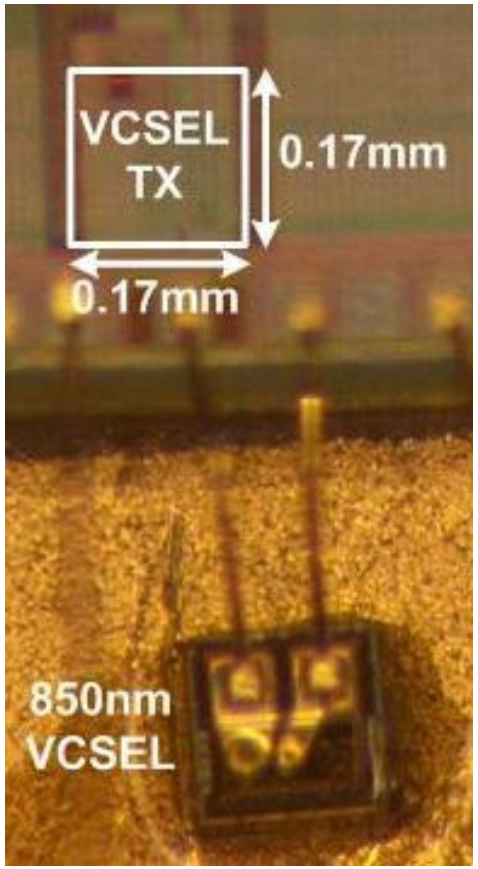

Wirebonded
10Gb/s VCSEL

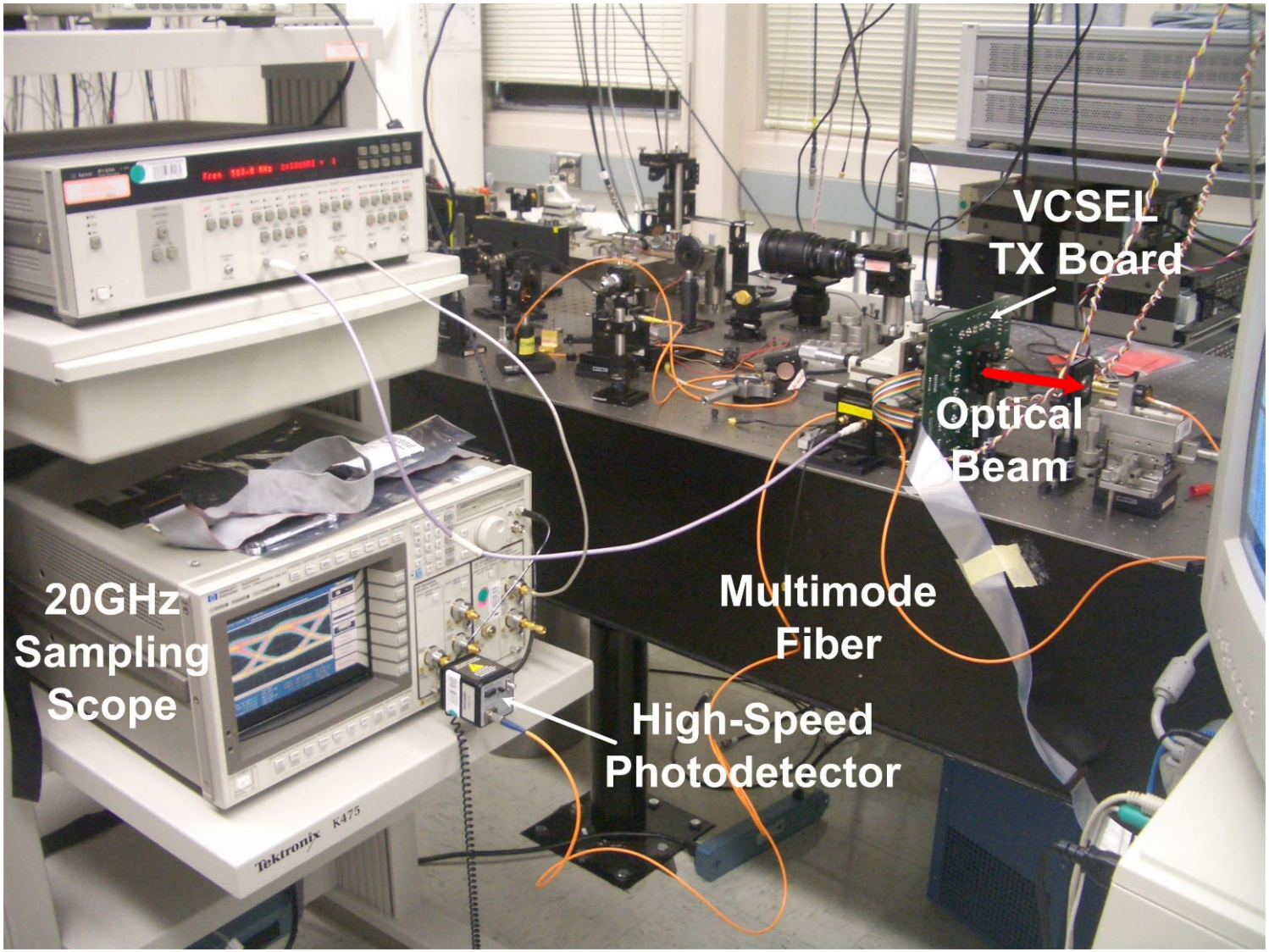

VCSEL 16Gb/s Optical Eye Diagrams

I_{avg}=6.2mA, ER=3dB

No Equalization

I_{DC} = 4.37mA
I_{MOD} = 3.66mA

w/ Equalization

I_{DC} = 3.48mA
I_{-1} = -0.70mA
I_0 = 4.36mA
I_1 = -0.19mA
I_2 = 0.19mA

Equalization increases vertical eye opening

45% at 16Gb/s

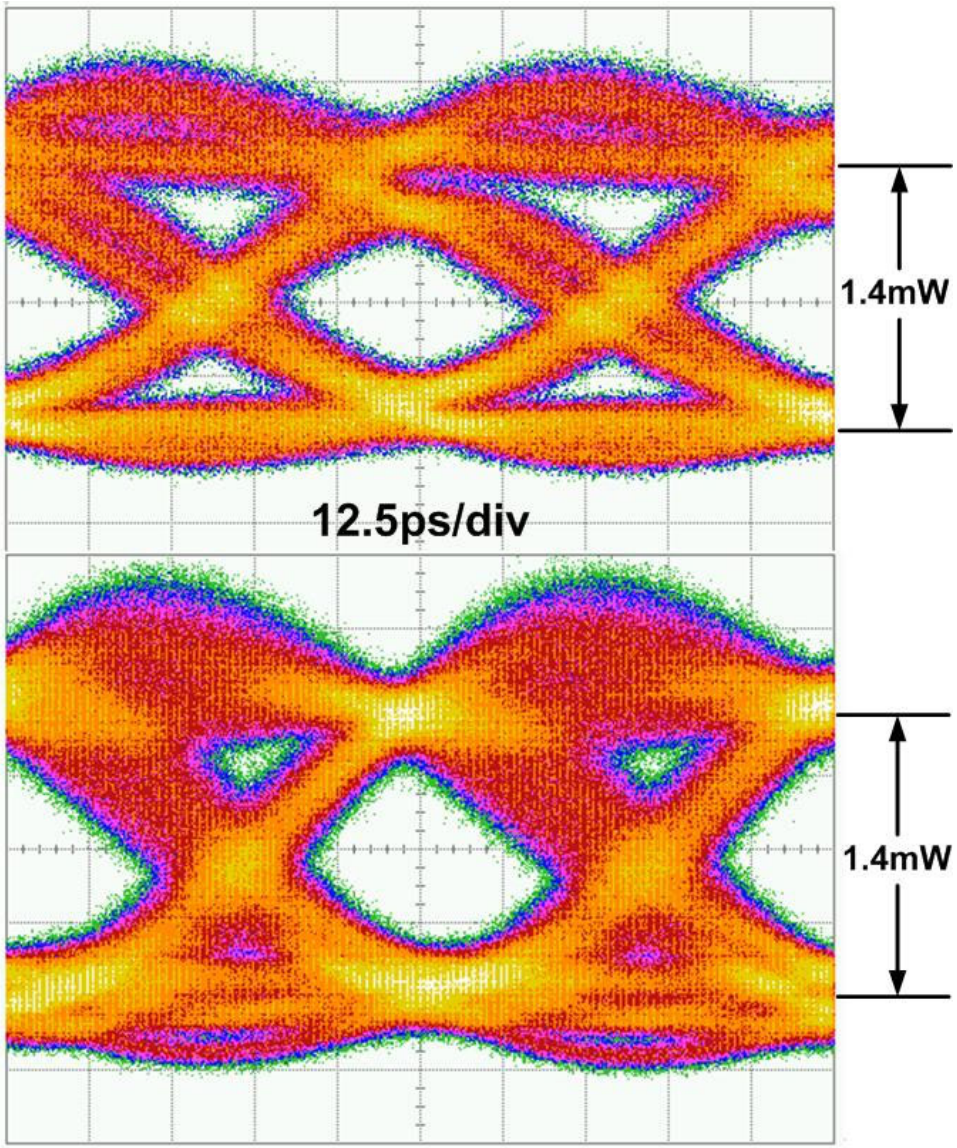

Equalization Performance

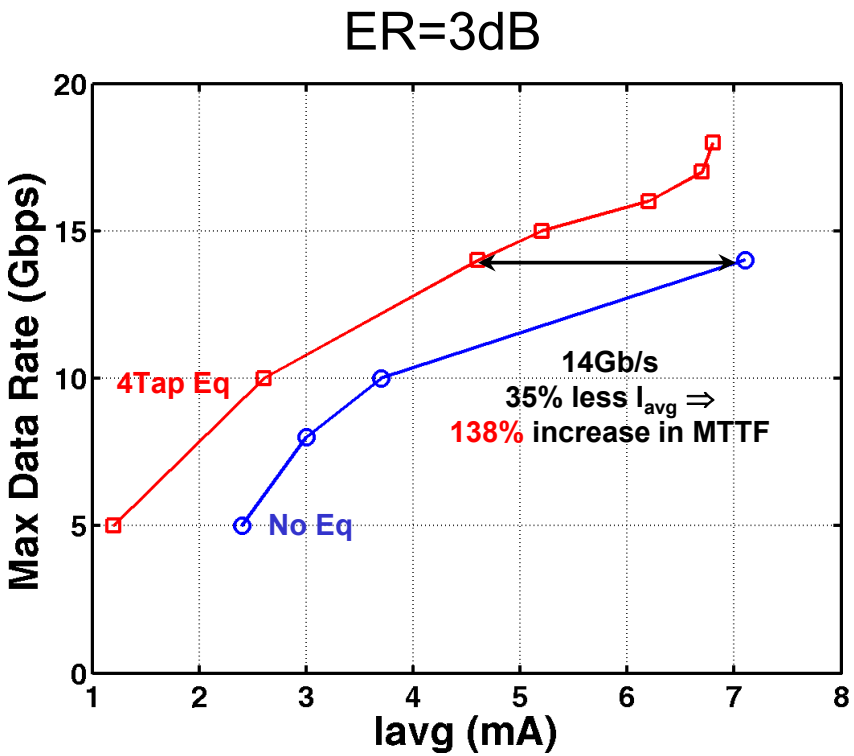

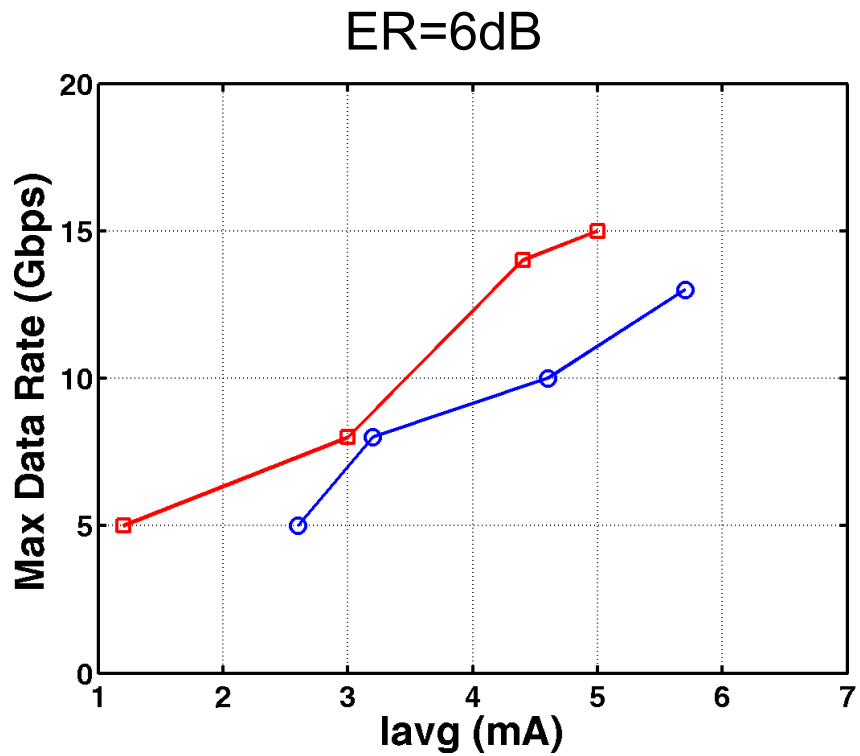

- Maximum data rate vs Average current
  - Min 80% eye opening & <40% overshoot
- Equalization allows lower average current for a given data rate
- Linear equalizer limited by VCSEL nonlinearity

PAM2 VCSEL Driver w/ 2-Tap Nonlinear FFE

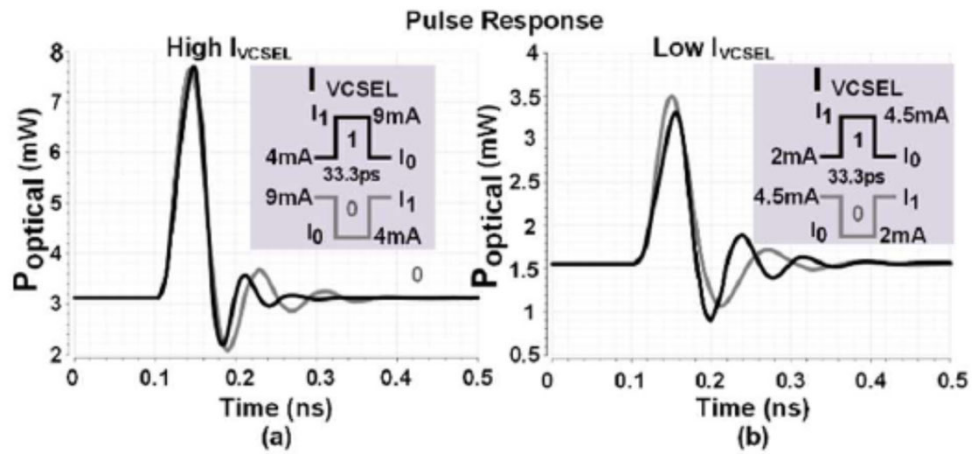

Fig. 2. VCSEL pulse responses for (a) high and (b) low I_{VCSEL}.

- VCSEL's bias-dependent frequency response results in nonlinear transient pulse responses
- A 2-tap non-linear equalizer with different equalization taps for high and low pulses provides performance improvement

[Raj CICC 2015]

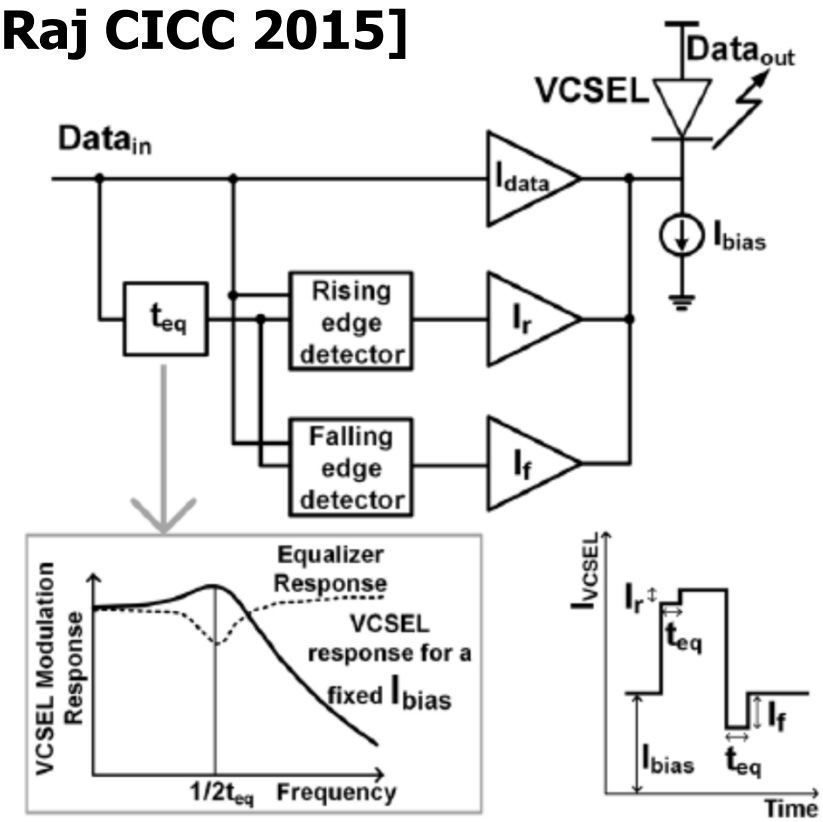

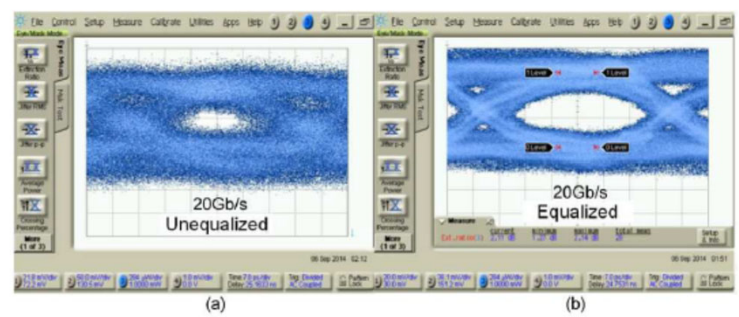

Fig. 8 Measured optical eye-diagram for PRBS-15 data at 20Gb/s. (a) Unequalized (b) Equalized.

PAM4 VCSEL Driver w/ 2.5-Tap Nonlinear FFE

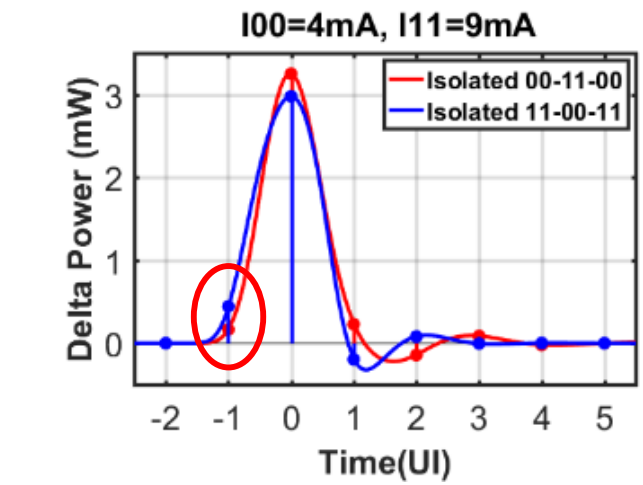

3-tap equalizer

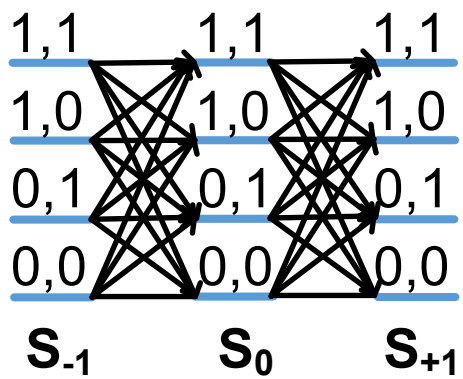

2.5-tap equalizer with the pre-cursor weight only a function of the MSB

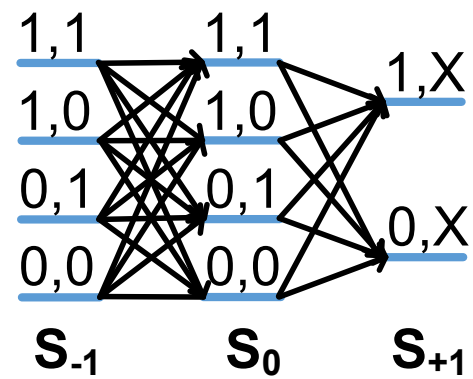

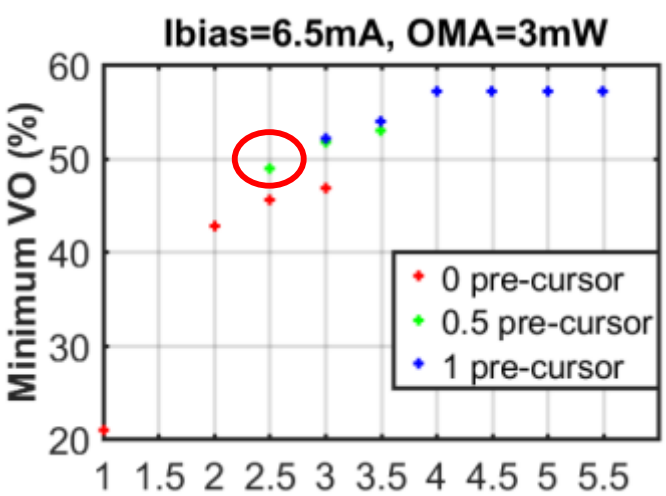

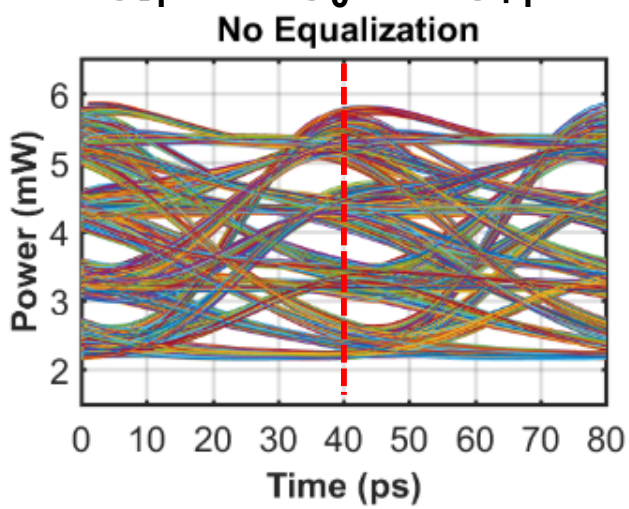

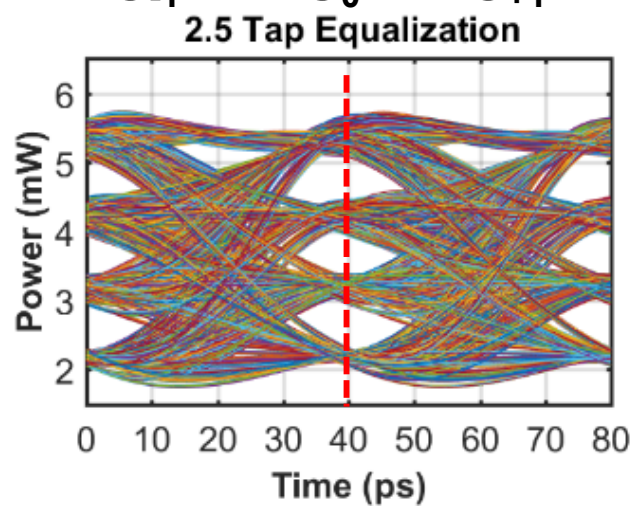

- A 2.5-tap nonlinear equalizer, with the first pre-cursor weight only dependent on the MSB, is a good compromise between complexity and performance

Serializing VCSEL TX & Output Stage

Serializing VCSEL TX

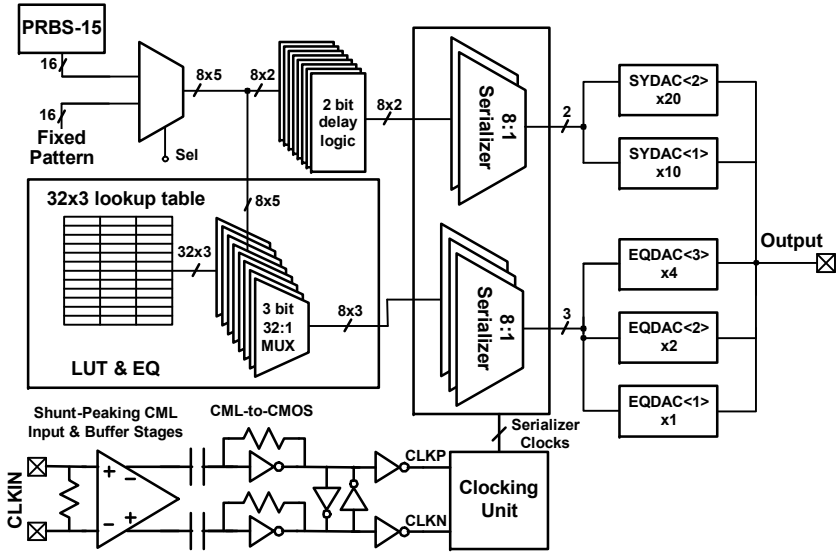

5-b Non-Uniform Current DAC Driver

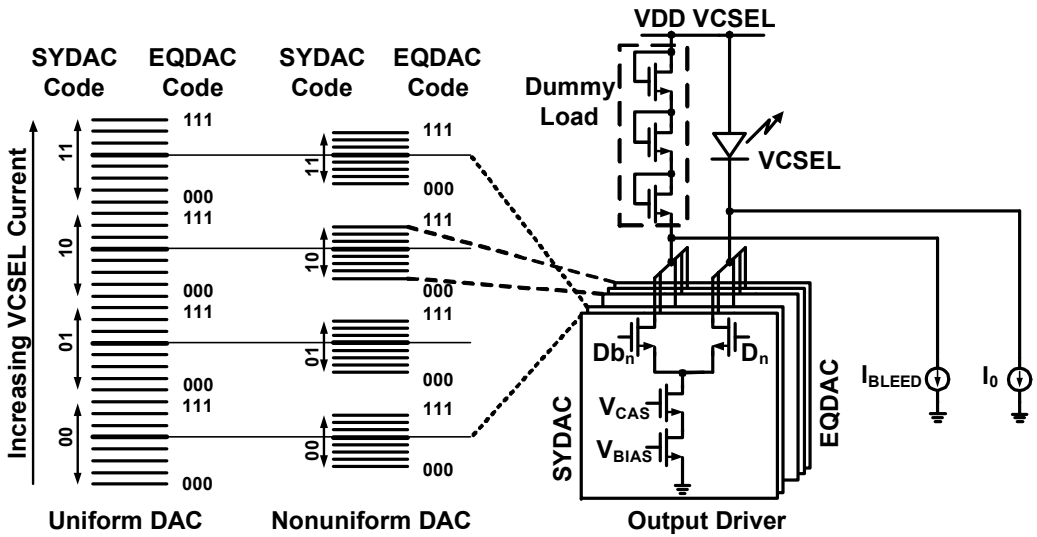

- VCSEL transmitter serializes 16 bits or 8 PAM-4 symbols

- Output stage is a 5-bit non-uniform current-mode DAC
  - MSB and MSB-1 set the main PAM-4 symbol levels
  - 3 LSB currents implement the 2.5-tap equalizer with the symbol pattern selecting the weighting from the 32X3 LUT

50Gb/s PAM4 Experimental Results

[Tyagi PTL 2018]

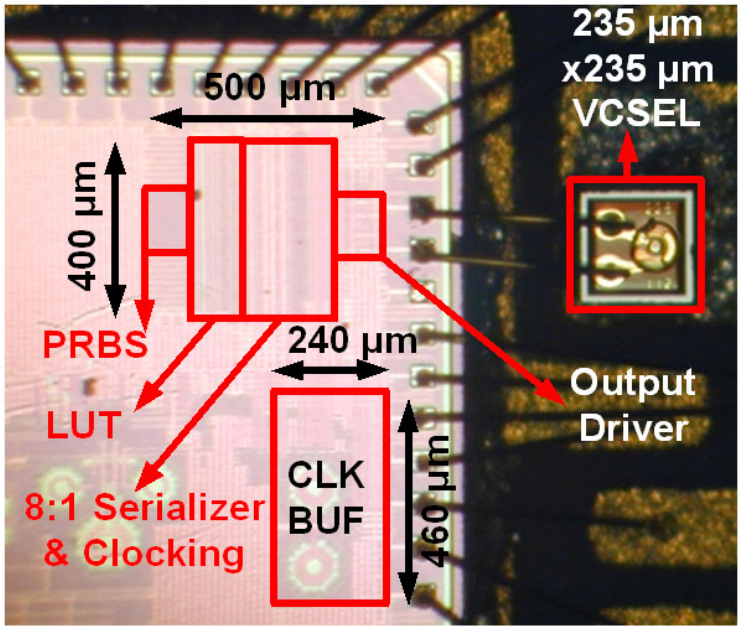

No Equalization

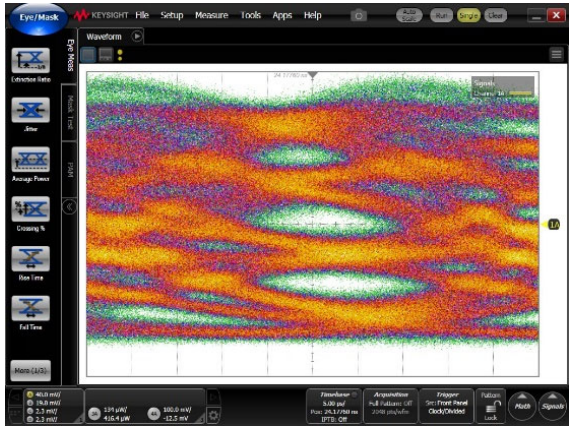

2-Tap Linear

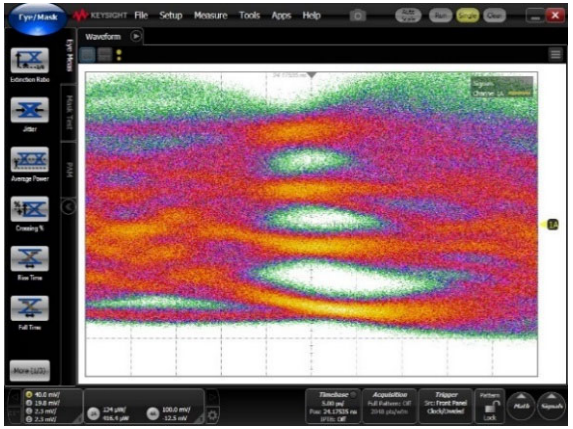

2.5-Tap Linear

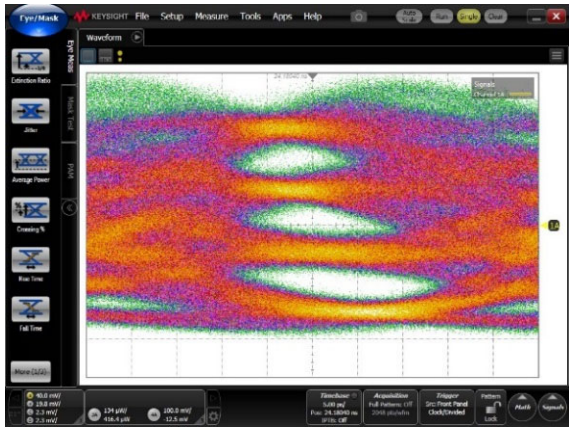

2.5-Tap Nonlinear

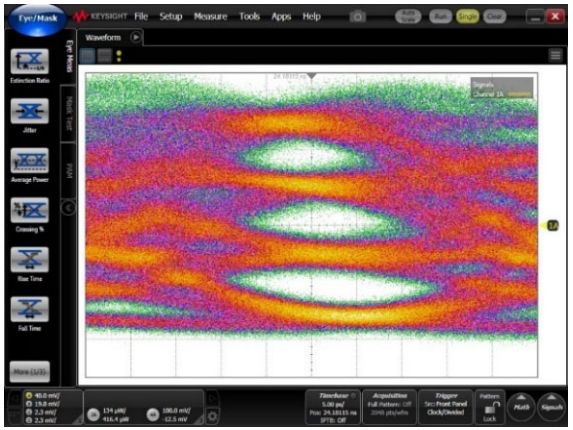

- Core transmitter area is 0.2mm^2
- 2.5 tap nonlinear equalizer improves eye height and timing alignment of the 3 PAM4 eyes

Agenda

- Common wireline modulation schemes
- Electrical transmitters
- Electrical channel issues & optical link motivation
- Optical channels & modulation techniques
- Optical transmitter circuits
  - Vertical-cavity surface-emitting laser (VCSEL)
  - Mach-Zehnder modulator (MZM)
  - Electro-absorption modulator (EAM)
  - Ring-resonator modulator (RRM)
- Conclusion

Mach-Zehnder Modulator (MZM)

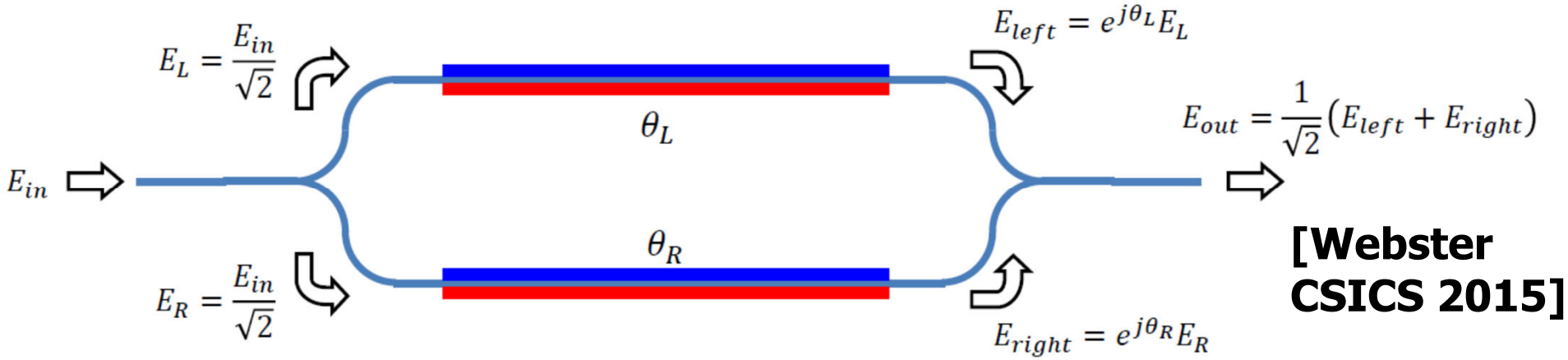

[Webster CSICS 2015]

- An optical interferometer is formed with the incoming light split, experiencing phase shifts through the two paths, and then recombined
- Assuming no loss and a perfect 50/50 splitter/combiner

$$\Delta\phi = \frac{(\theta_R - \theta_L)}{2} \qquad \phi = \frac{(\theta_R + \theta_L)}{2}$$

Field Response

$$E_{out} = E_{in}\cos(\Delta\phi)e^{j\phi}$$

Intensity Response

$$P_{out} = |E_{out}|^2 = \frac{1}{2}|E_{in}|^2[1 + \cos(\theta_R - \theta_L)]$$

$$\boxed{\frac{P_{out}}{P_{in}} = \frac{1}{2}[1 + \cos(\theta_R - \theta_L)] = \frac{1}{2}\left[1 + \cos\left(\pi \cdot \frac{V_M}{V\pi}\right)\right]}$$

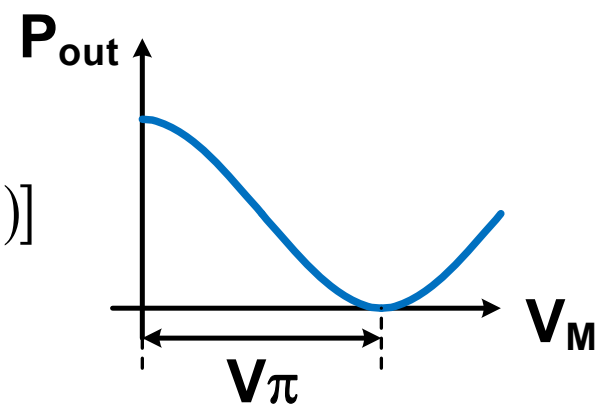

Silicon Depletion-Mode MZM

[Analui JSSC 2006]

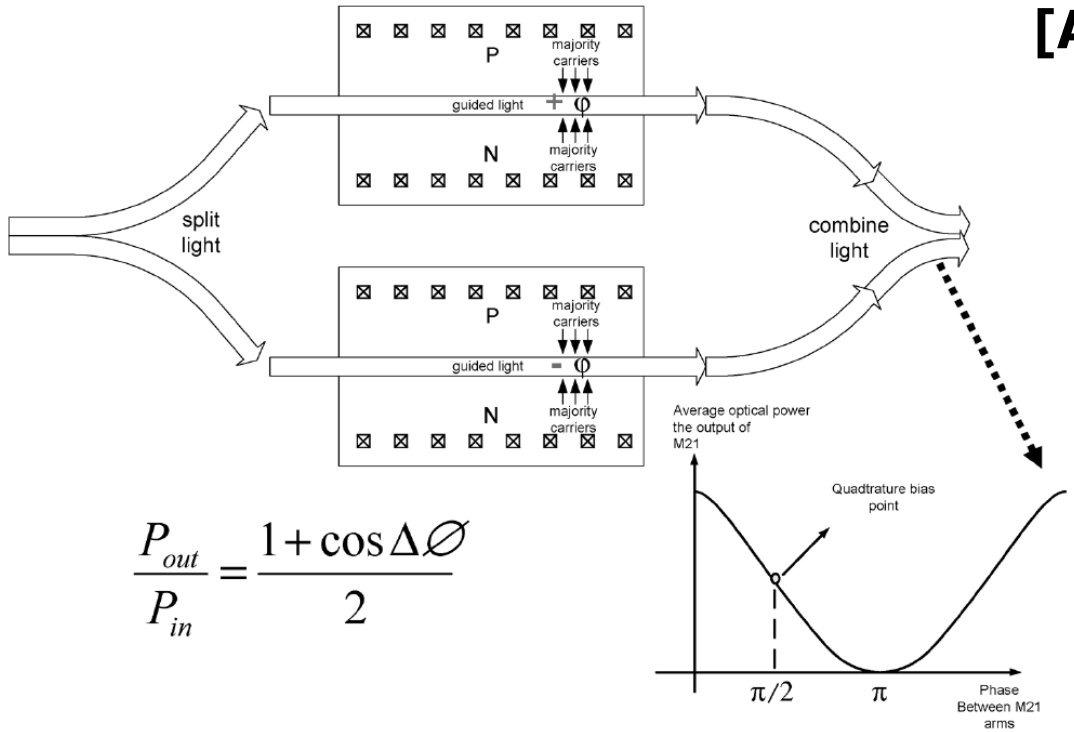

$$\frac{P_{out}}{P_{in}} = \frac{1+\cos\Delta\varnothing}{2}$$

- Here the silicon waveguide is doped as a PN junction
- The depletion region is modulated as a function of the applied reverse bias voltage
- The resultant change in the carrier density within the depletion region causes the refractive index to change

Traveling-Wave MZM Driver

[Analui JSSC 2006]

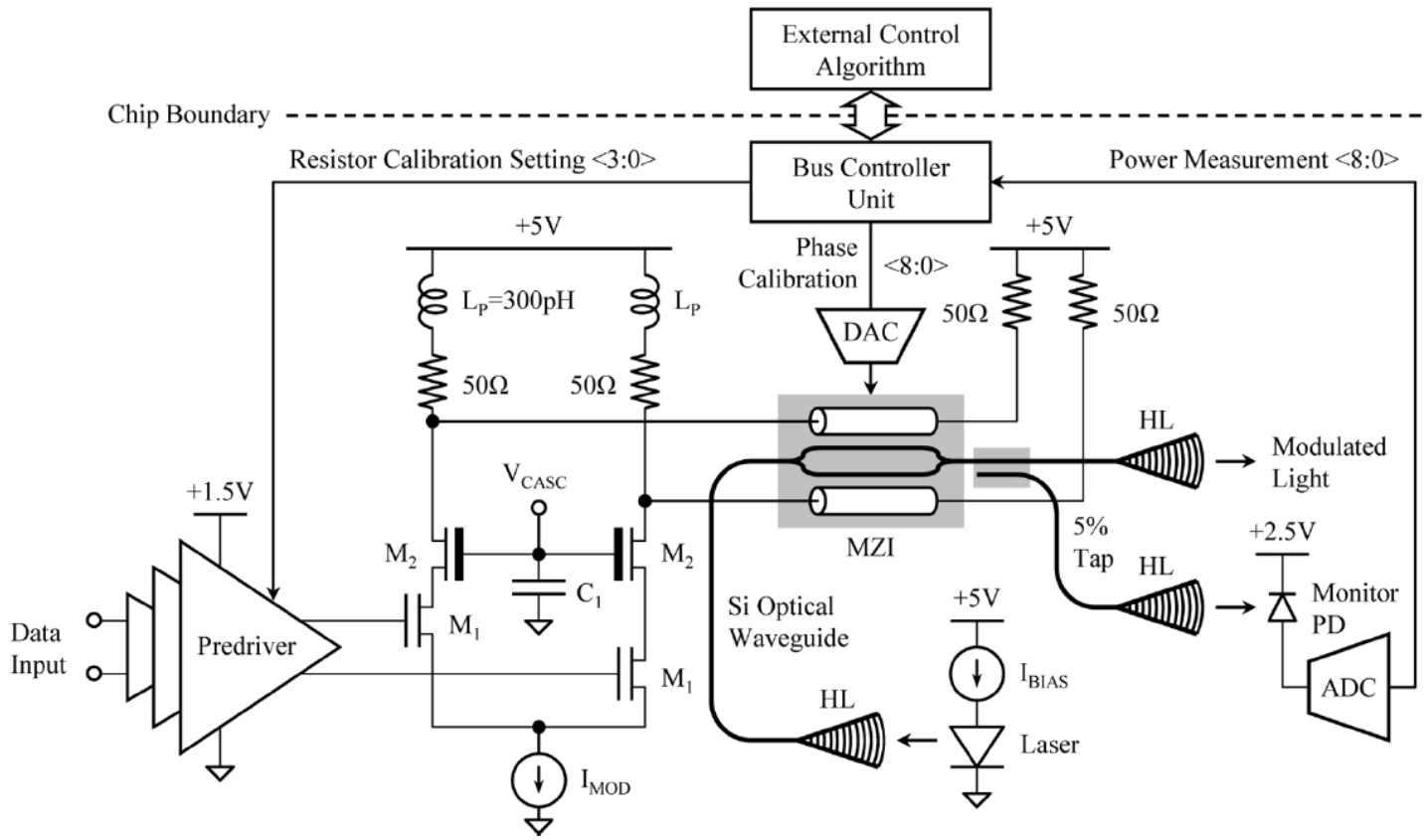

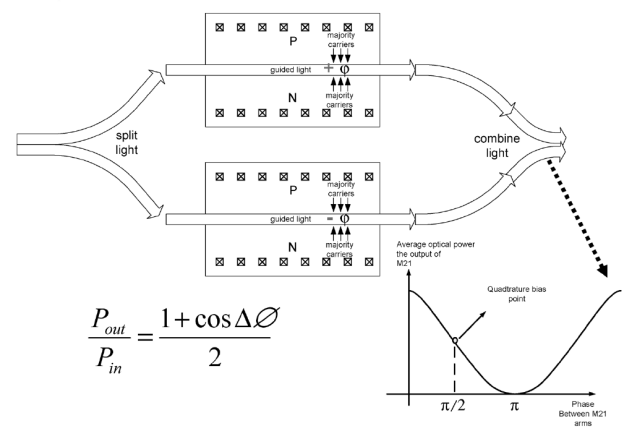

$$\frac{P_{out}}{P_{in}} = \frac{1+\cos\Delta\varnothing}{2}$$

- Depletion-mode MZM is driven with a $5V_{ppd}$ signal

Distributed MZM Driver

[Cignoli ISSCC 2015]

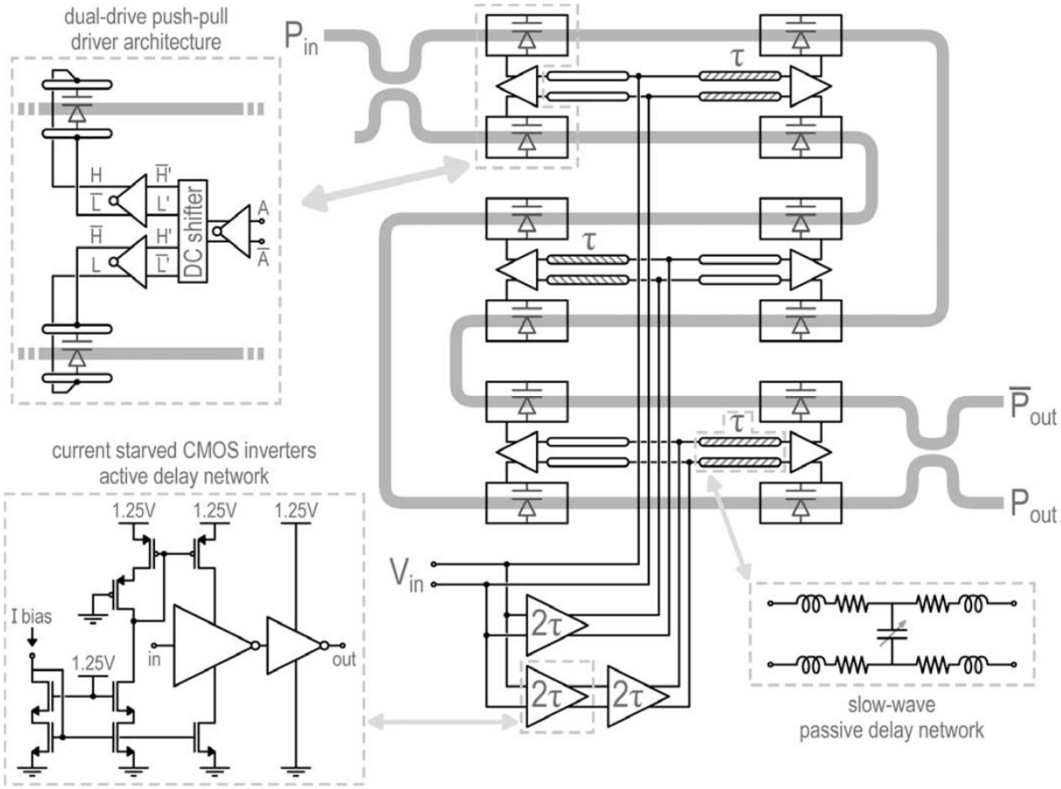

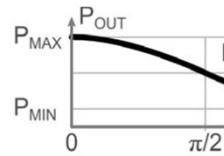

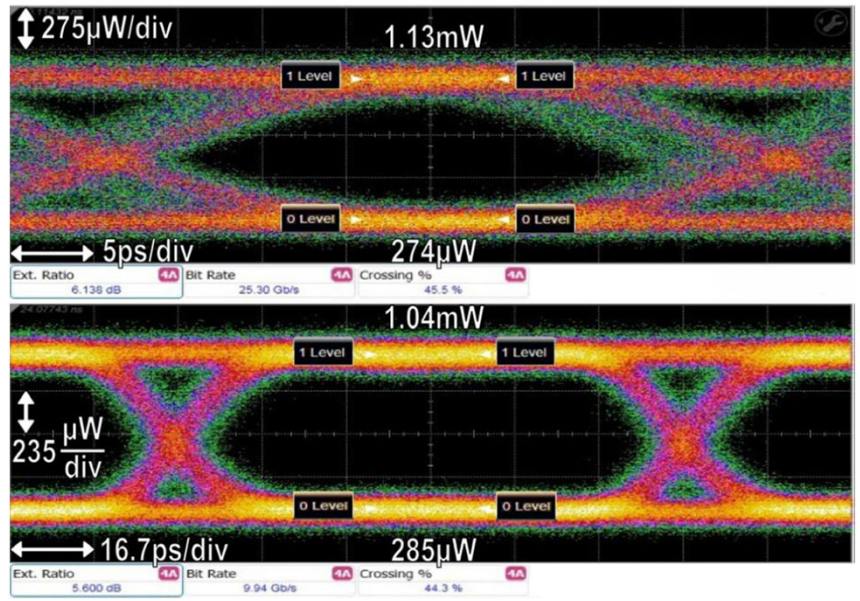

- Allows for CMOS style drivers
- Well suited for a monolithic silicon photonic process
- Hybrid integration requires may pad connections between CMOS/silicon photonic die

PAM4 Level Generation w/ MZMs

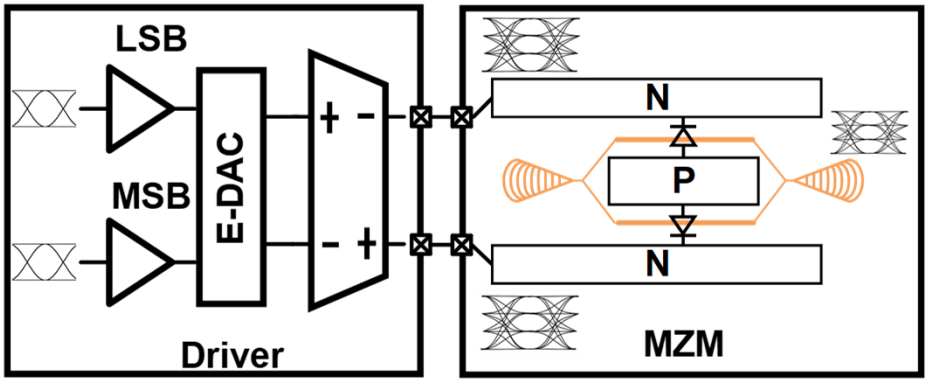

(a)

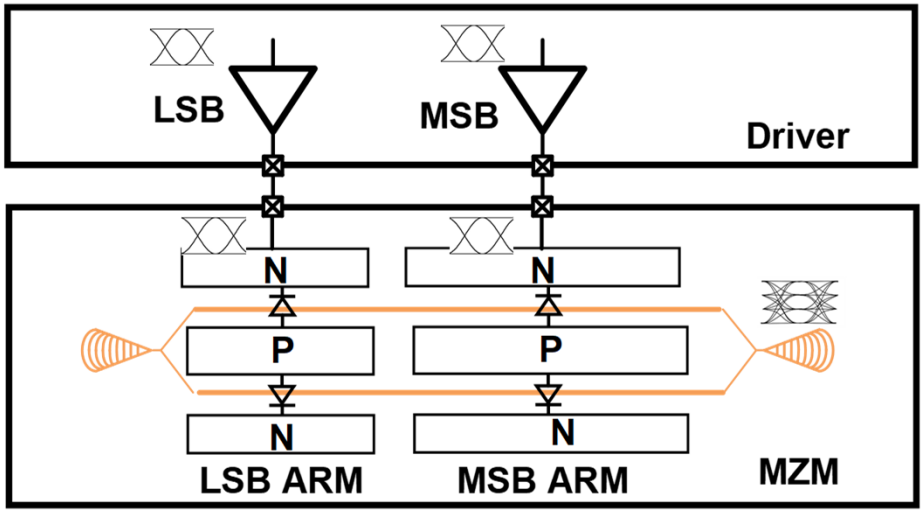

(b)

- E-DAC PAM4 TX
  - PAM4 driver bandwidth and swing limitation
  - Multi current/voltage level
- O-DAC PAM4 TX
  - Velocity mismatch between LSB and MSB
  - Multi driver design

Optical DAC NRZ/PAM4 Reconfigurable MZM TX

[Li BCICTS 2018]

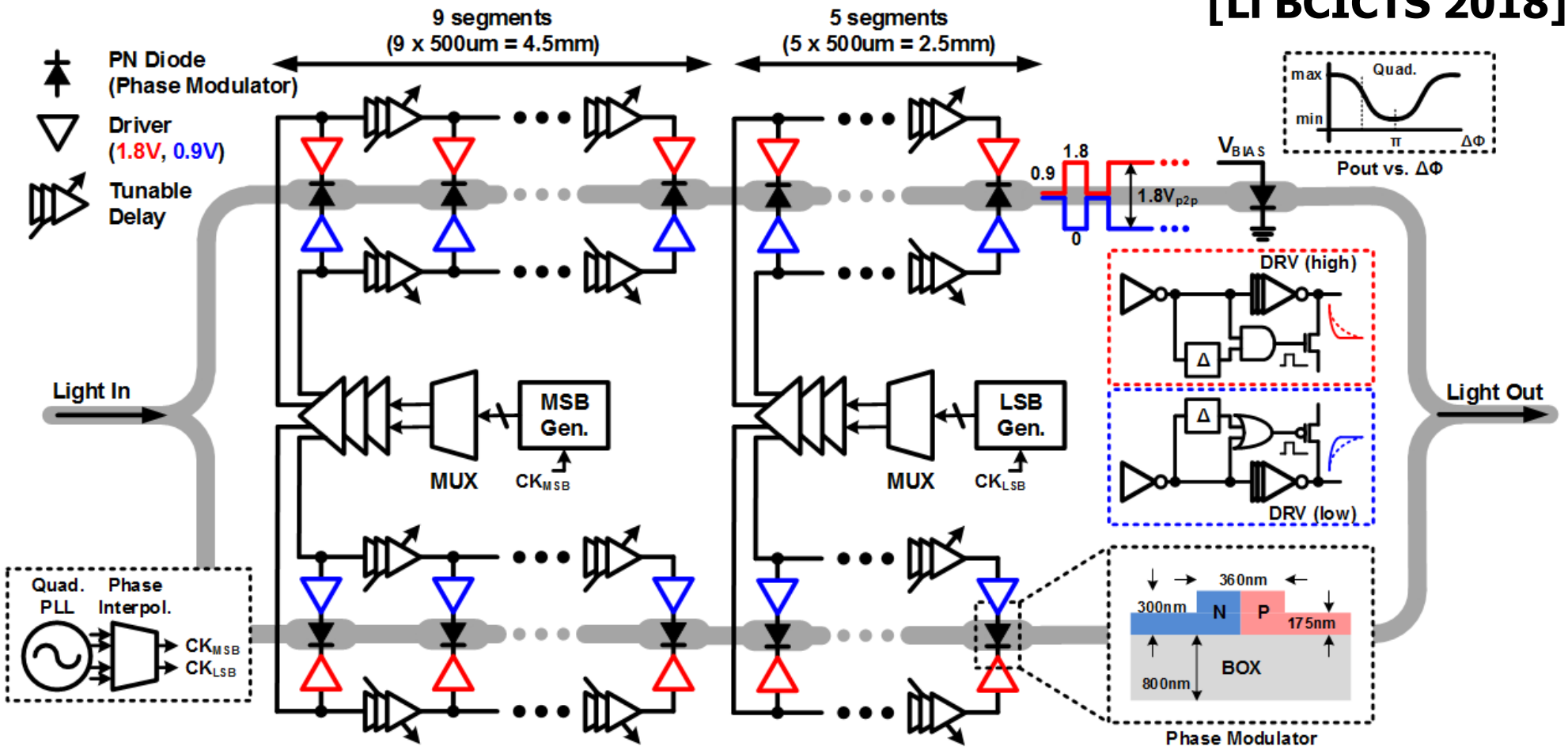

- 5 LSB segments and 9 MSB segments

56Gb/s PAM4 16nm FinFET CMOS Prototype

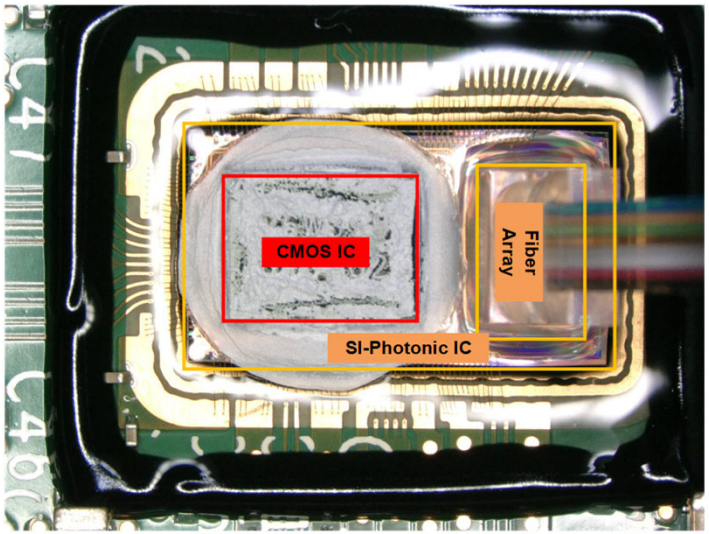

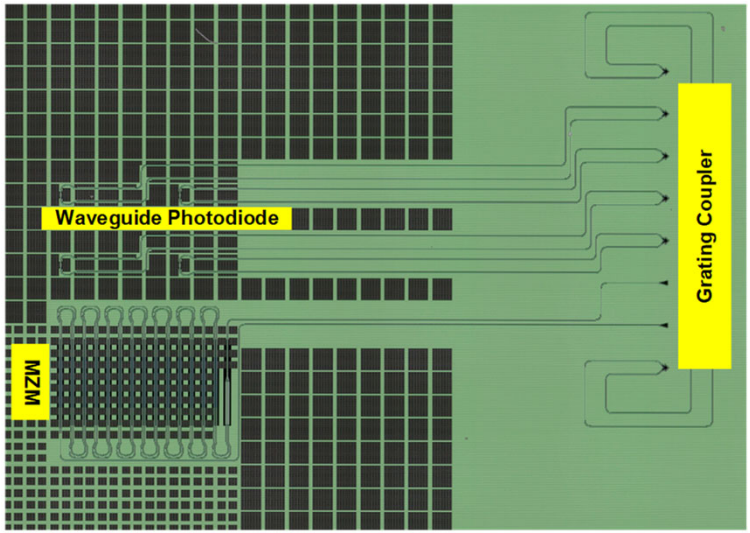

150uw/div 8ps/div

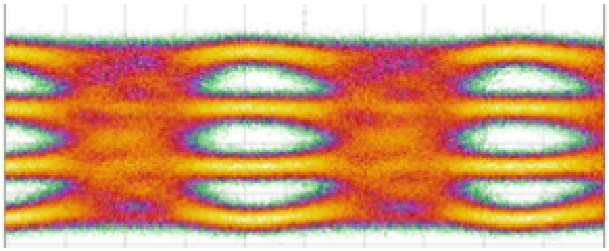

150uw/div 8ps/div

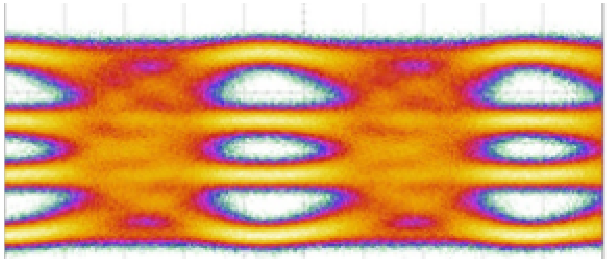

150uw/div 8ps/div

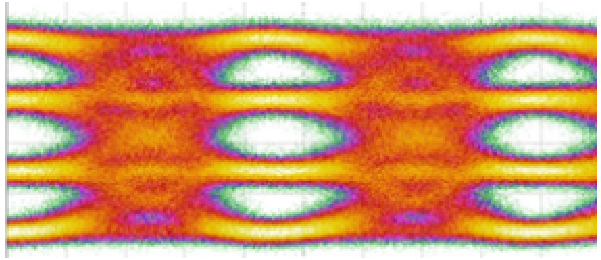

	Segment setting	ER	RLM	EYE width	Eye height
(a)	3 LSB+6 MSB	6.35dB	0.942	5.12ps	11.6uW
(b)	4 LSB+7 MSB	8.14dB	0.896	5.01ps	4.6uW
(c)	4 LSB+8 MSB	8.46dB	0.944	5.7ps	18.4uW

Agenda

- Common wireline modulation schemes
- Electrical transmitters
- Electrical channel issues & optical link motivation
- Optical channels & modulation techniques
- Optical transmitter circuits
  - Vertical-cavity surface-emitting laser (VCSEL)
  - Mach-Zehnder modulator (MZM)
  - Electro-absorption modulator (EAM)
  - Ring-resonator modulator (RRM)
- Conclusion

Electroabsorption Modulator (EAM)

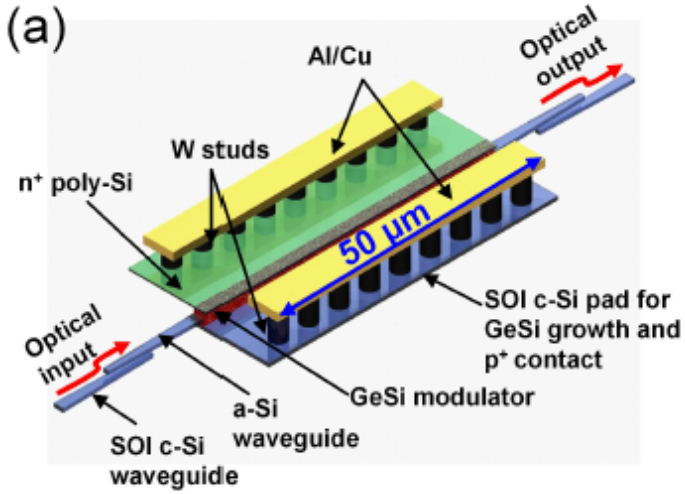

Waveguide EAM [Liu 2008]

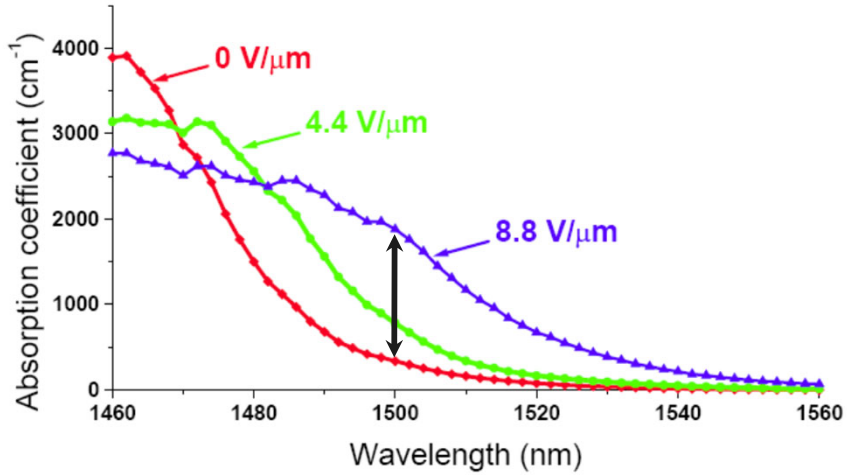

[Helman JSTQE 2005]

- Electroabsorption modulators operate with voltage-dependent absorption of light passing through the device
- The device structure is a reverse-biased p-i-n diode
- The Franz-Keldysh effect describes how the effective bandgap of the semiconductor decreases with increasing electric field, shifting the absorption edge
- While this effect is weak, it can be enhanced with device structures with multiple quantum wells (MQW) through the quantum-confined Stark effect

EAM Device Types

Surface Normal EAM*

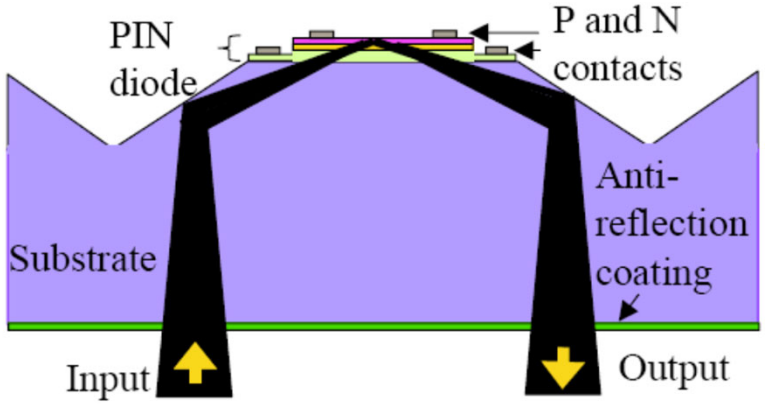

[Helman JSTQE 2005]

Waveguide EAM [Liu 2008]

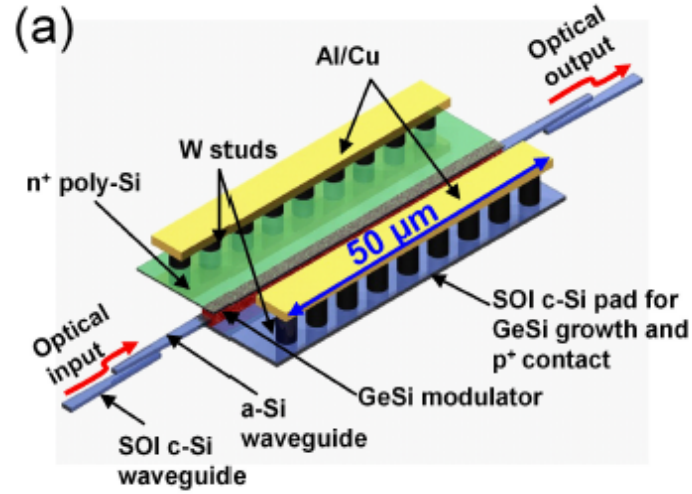

MQW EAM Array Bonded onto a CMOS Chip [Keeler 2002]

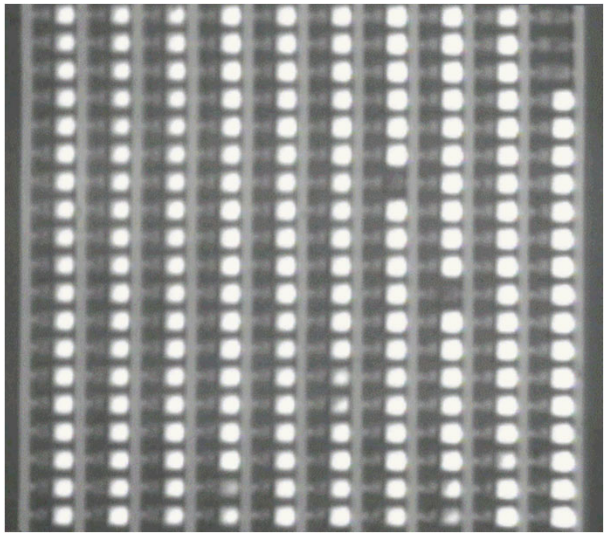

- EAMs can be waveguide-based or surface normal
- Waveguide-based structures typically allow for higher extinction ratios due to the increased absorption length
- Surface normal devices provide the potential for large arrays of optical I/Os through bonding

EAM Switching Curve

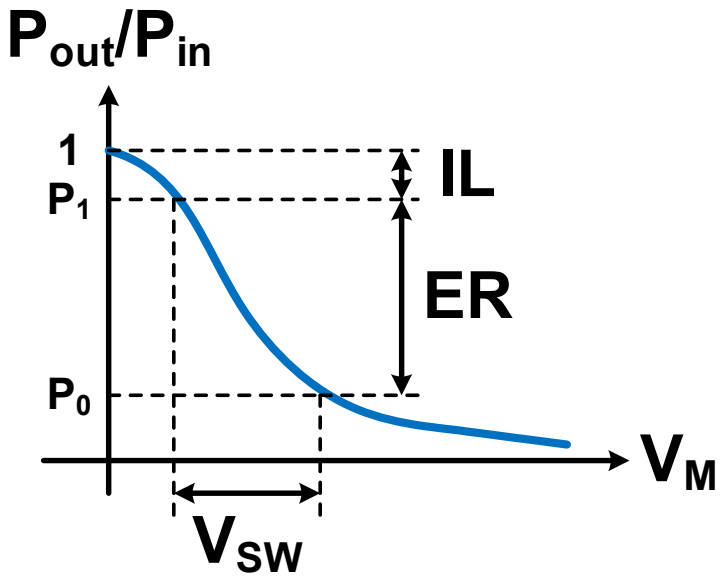

- At low reverse-bias, the device ideally has low absorption and most of the light appears at the output
- The absorption increases when a strong reverse-bias is applied and less power appears at the output
- EAMs are characterized with a switching voltage V_{SW} that corresponds to a given extinction ratio
- Typical switching voltages are 1.5 to 4V

EAM Equivalent Model

[Deshours JLT 2011]

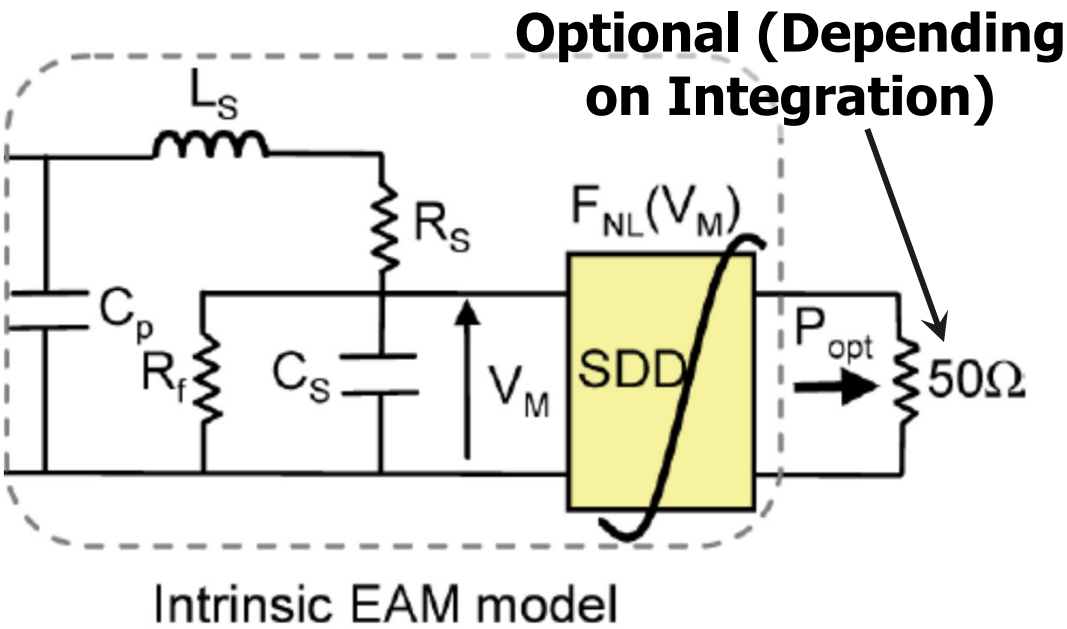

TABLE I
EXTRACTED PARAMETERS COMPONENTS OF THE EAM EQUIVALENT CIRCUIT

Symbol	Parameter	Value
R_S	serial resistance	12 Ω
Cs	junction capacitance	90 fF
R_f	leakage resistance	50 kΩ
C_p	bond-pad capacitance	20 fF
L_S	parasitic metallization inductance	10 pH

$$F_{\mathrm{NL}}(V_M) = \frac{A_0 + \sum_{k=1}^{6} A_k \times V_M^k}{1 + \sum_{k=1}^{4} B_k \times V_M^k}$$

Extracted from curve fitting measurements

- Electrically, the EAM is a reverse-based diode
- This is modeled with a reverse-bias diode model and a non-linear absorption block $F_{NL}(V_M)$
- Depending on the integration level with the driver, the device may also include a termination resistor

67GHz Hybrid Silicon (InP) EAM

[Tang OFC 2012]

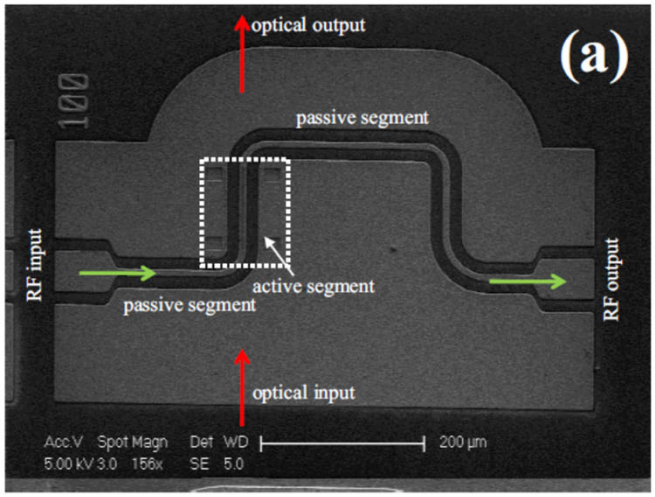

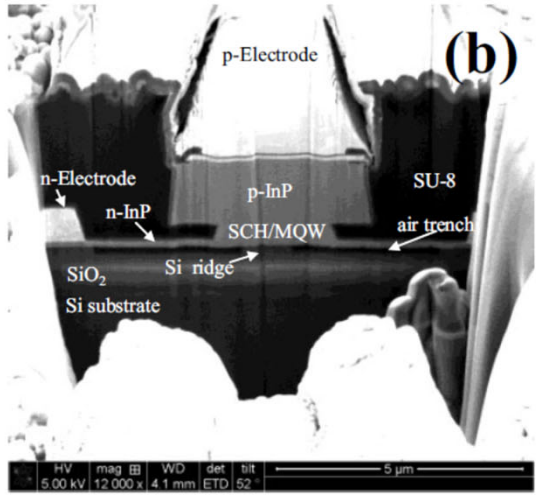

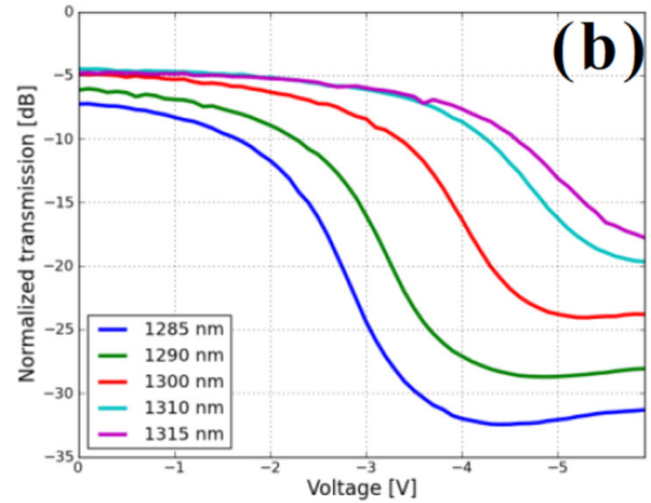

- EAM is formed with an InP p-i-n diode bonded onto silicon
- Design for a controlled-impedance driver
- Nominal 1300nm operation with -4V bias and 2V drive achieves ~15dB ER

50Gb/s

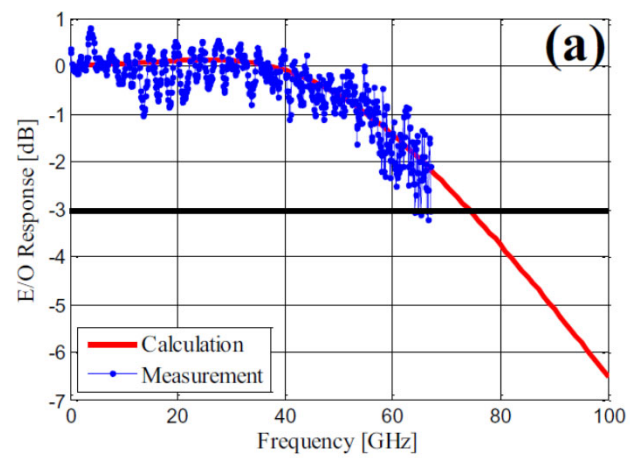

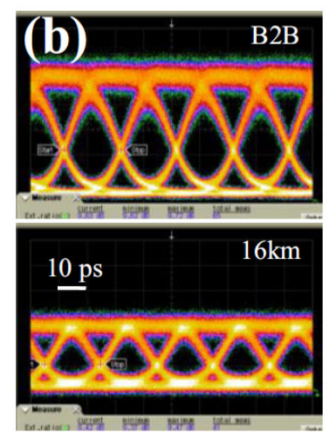

Controlled-Impedance EAM Driver

[Vaernewyck Opt. Exp. 2013]

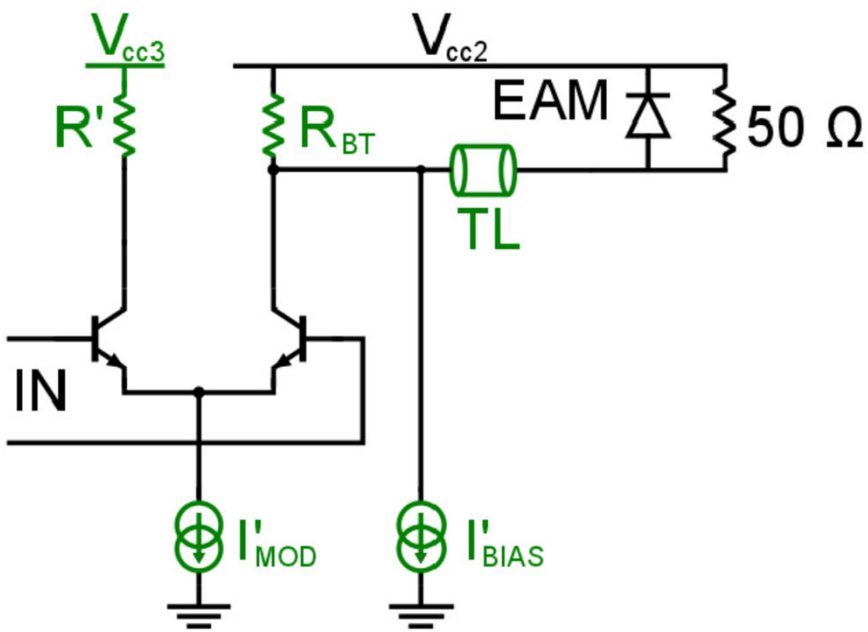

10Gb/s w/ 2.5V swing & -1.7V bias

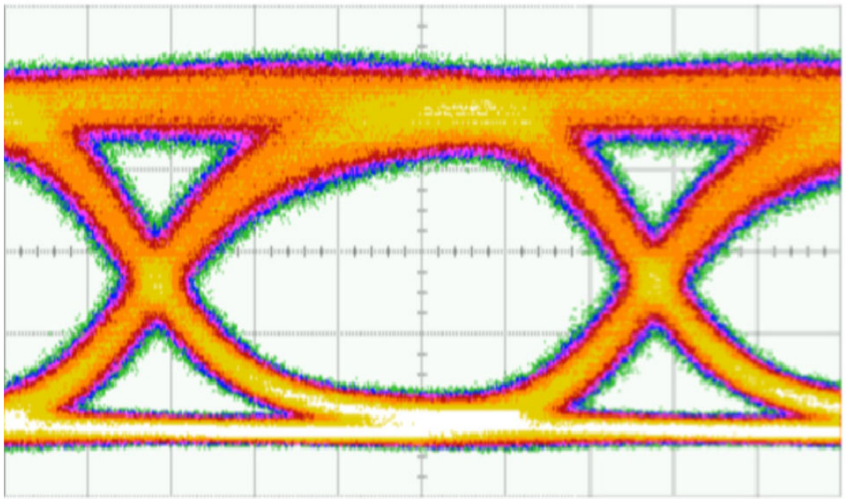

- If the EAM is not tightly integrated with the driver circuitry, then a controlled-impedance driver is required
- Bias current used to set operating point
- The high EAM swings results in large power consumption

28Gb/s GeSi EAM on SOI

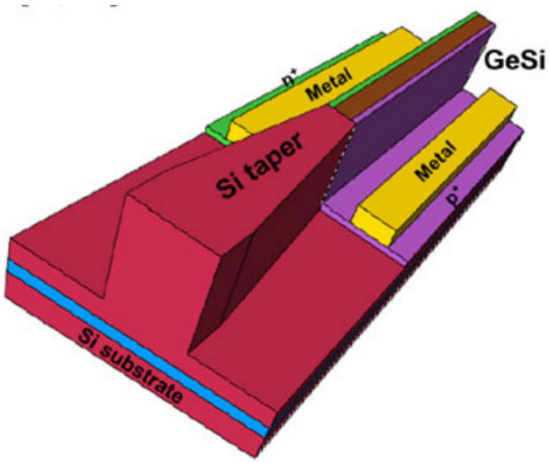

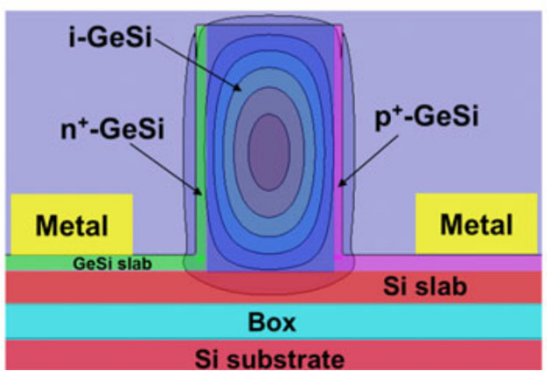

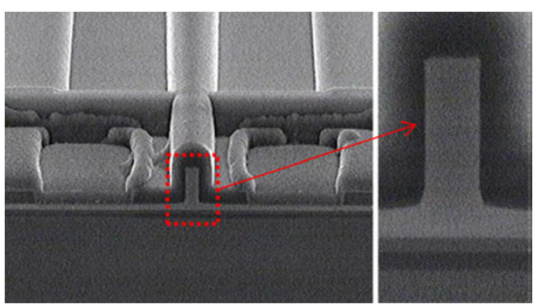

[Feng JSTQE 2013]

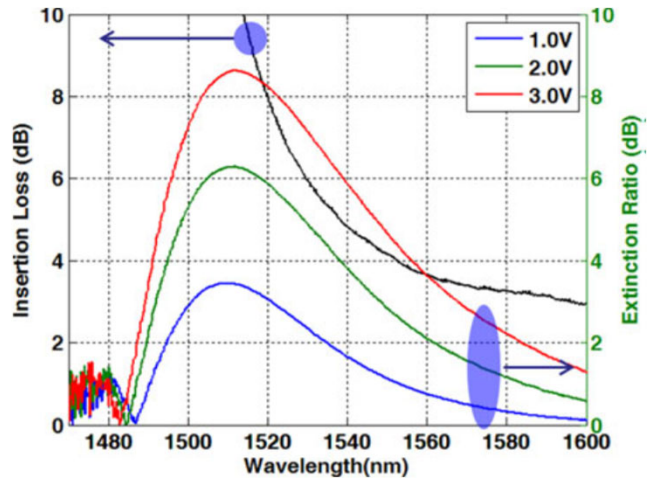

28Gb/s w/ 3V Swing

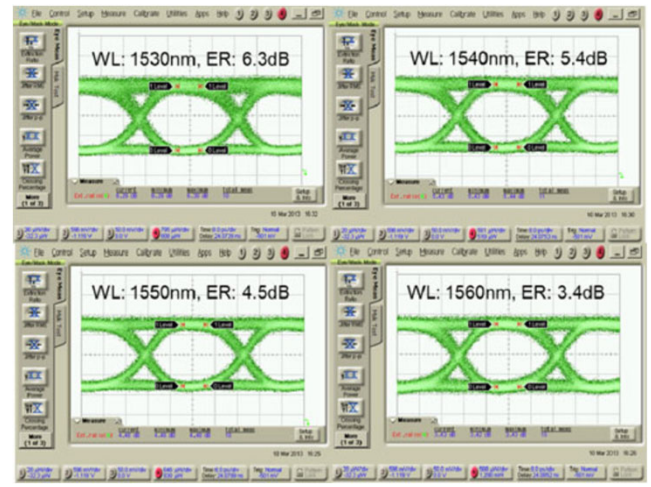

- EAM is formed with an GeSi p-i-n diode fabricated in an SOI platform
- Device is only 50mm long and can be driven with a lumped-element driver
- Nominal operation with 3V drive achieves 3-6dB ER over a wide wavelength range

Pulsed-Cascode Output Stage

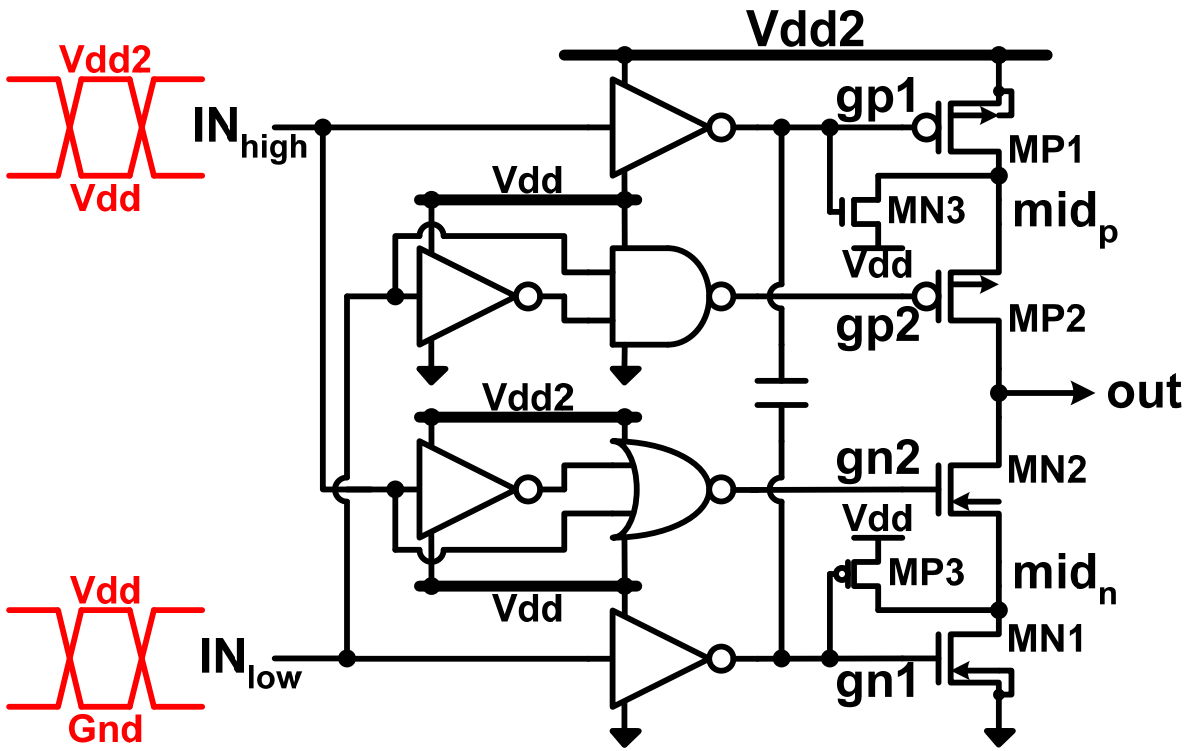

[Palermo ESSCIRC 2006]

- Uses only two-transistor stack for maximum speed
- The cascode transistors gates are pulsed during a transistion to prevent V_{DS} overstress

30Gb/s Lumped-Element EAM Driver

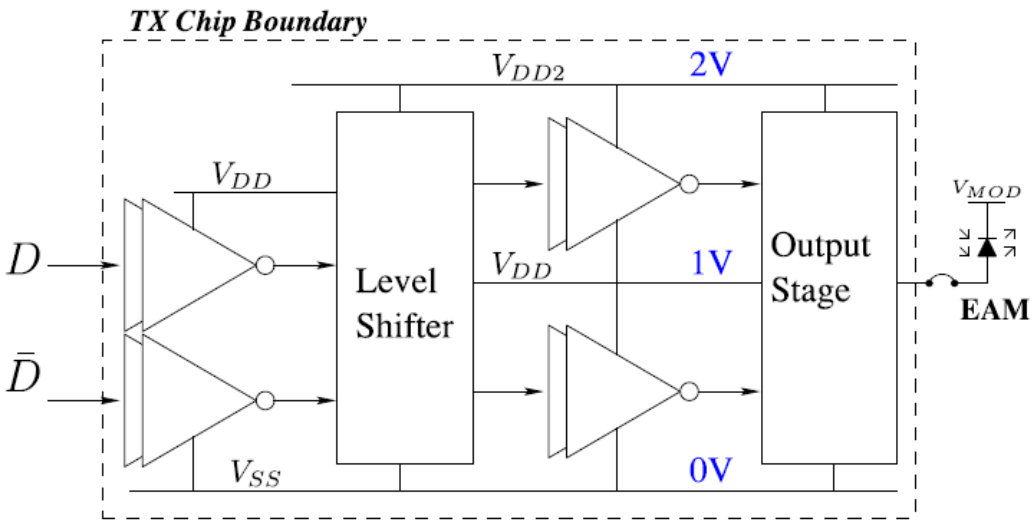

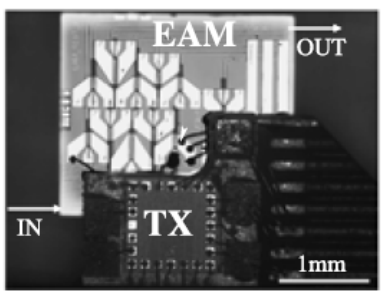

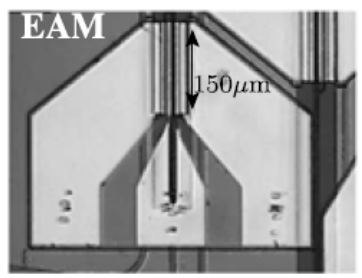

[Dupuis JLT 2015]

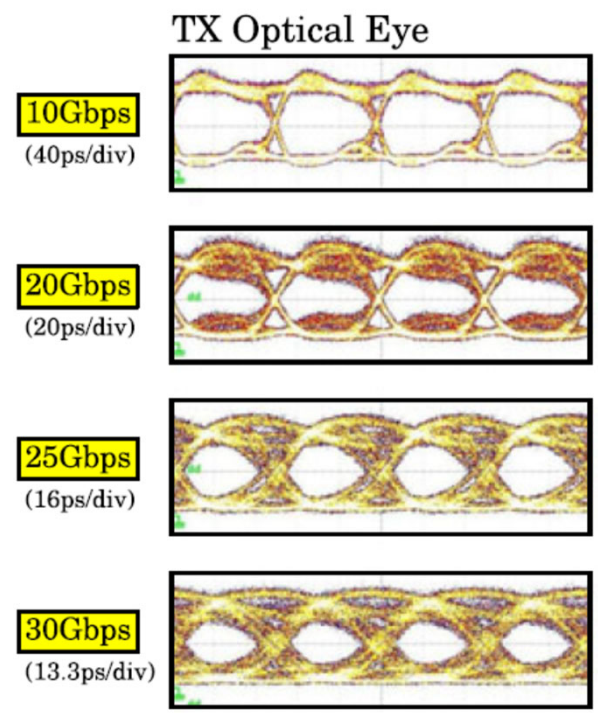

- Using a 5.4V reverse bias and 2Vpp dynamic swing to achieve 8dB ER
- Have ~7dB insertion loss

Agenda

- Common wireline modulation schemes
- Electrical transmitters
- Electrical channel issues & optical link motivation
- Optical channels & modulation techniques
- Optical transmitter circuits
  - Vertical-cavity surface-emitting laser (VCSEL)
  - Mach-Zehnder modulator (MZM)
  - Electro-absorption modulator (EAM)
  - Ring-resonator modulator (RRM)
- Conclusion

Ring Resonator Filter

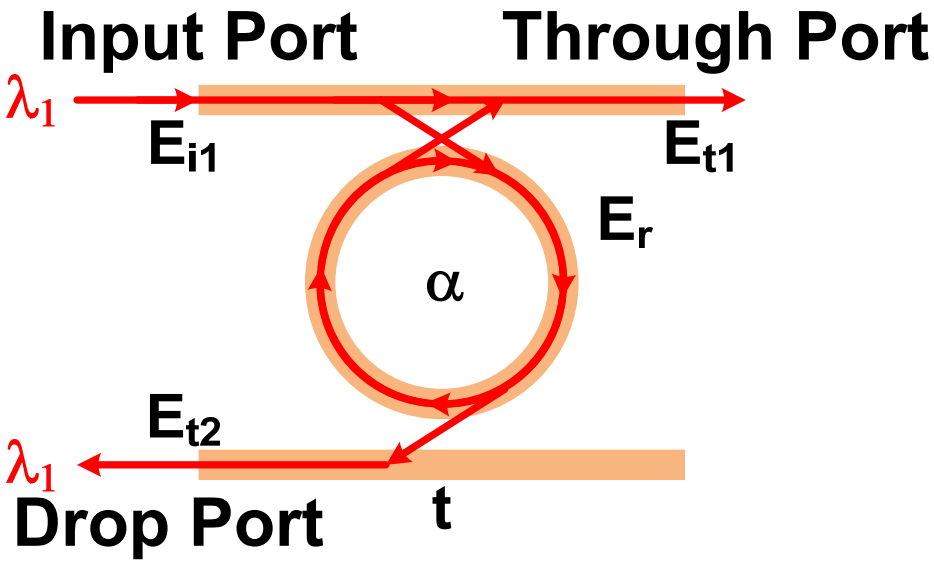

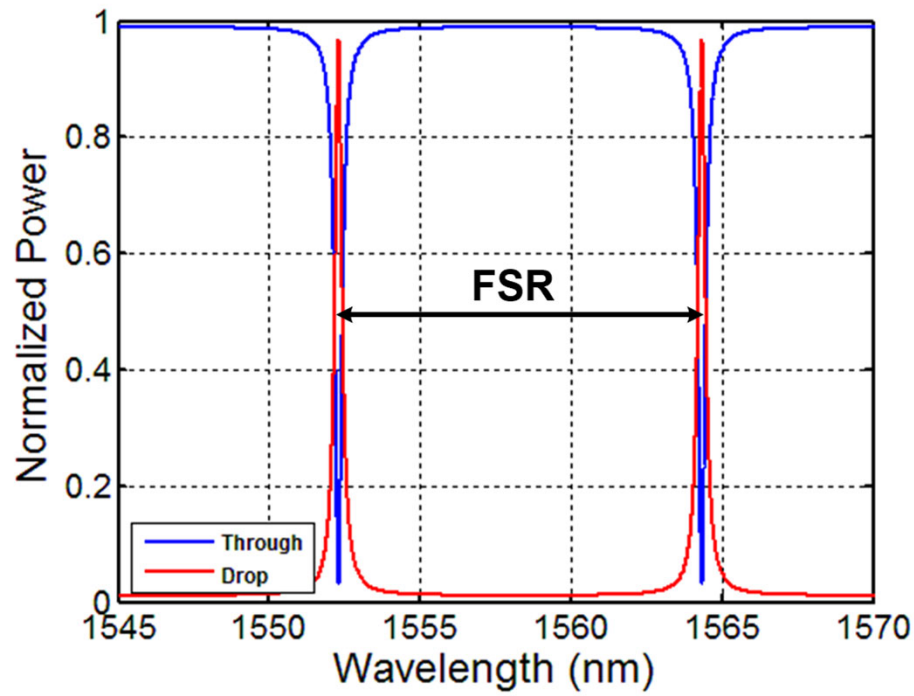

- Ring resonators display a high-*Q* notch filter response at the through port and a band-pass response at the drop port
- This response repeats over a free spectral range (FSR)

Ring-Resonator Modulator (RRM)

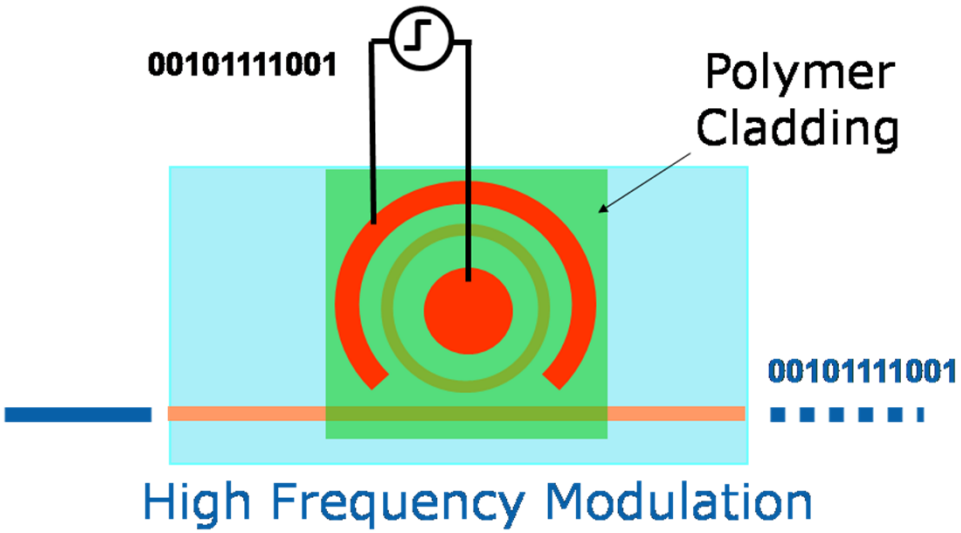

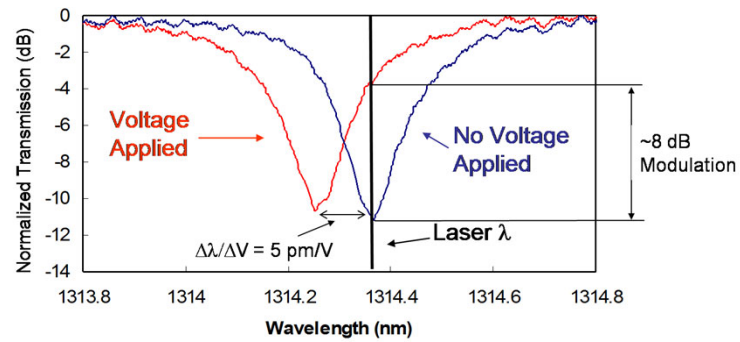

- Refractive devices which modulate by changing the interference light coupled into the ring with the waveguide light

- Devices are relatively small (ring diameters < 20μm) and can be treated as lumped capacitance loads (~10fF)

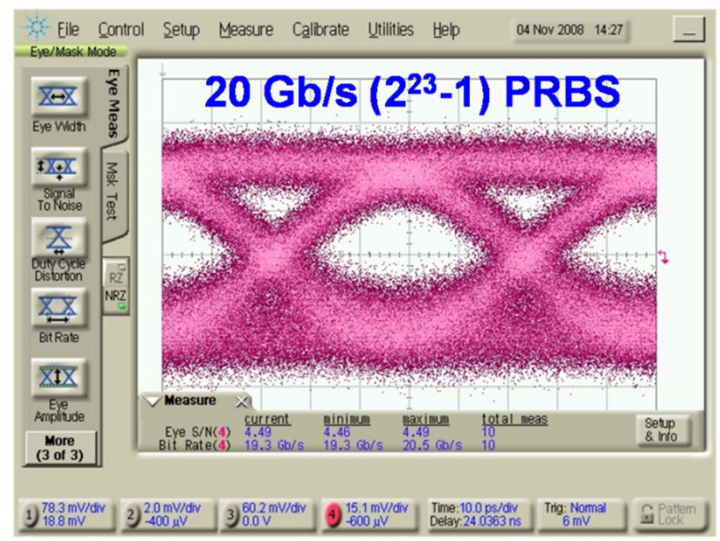

[Young ISSCC 2009]

Wavelength Division Multiplexing w/ Ring Resonators

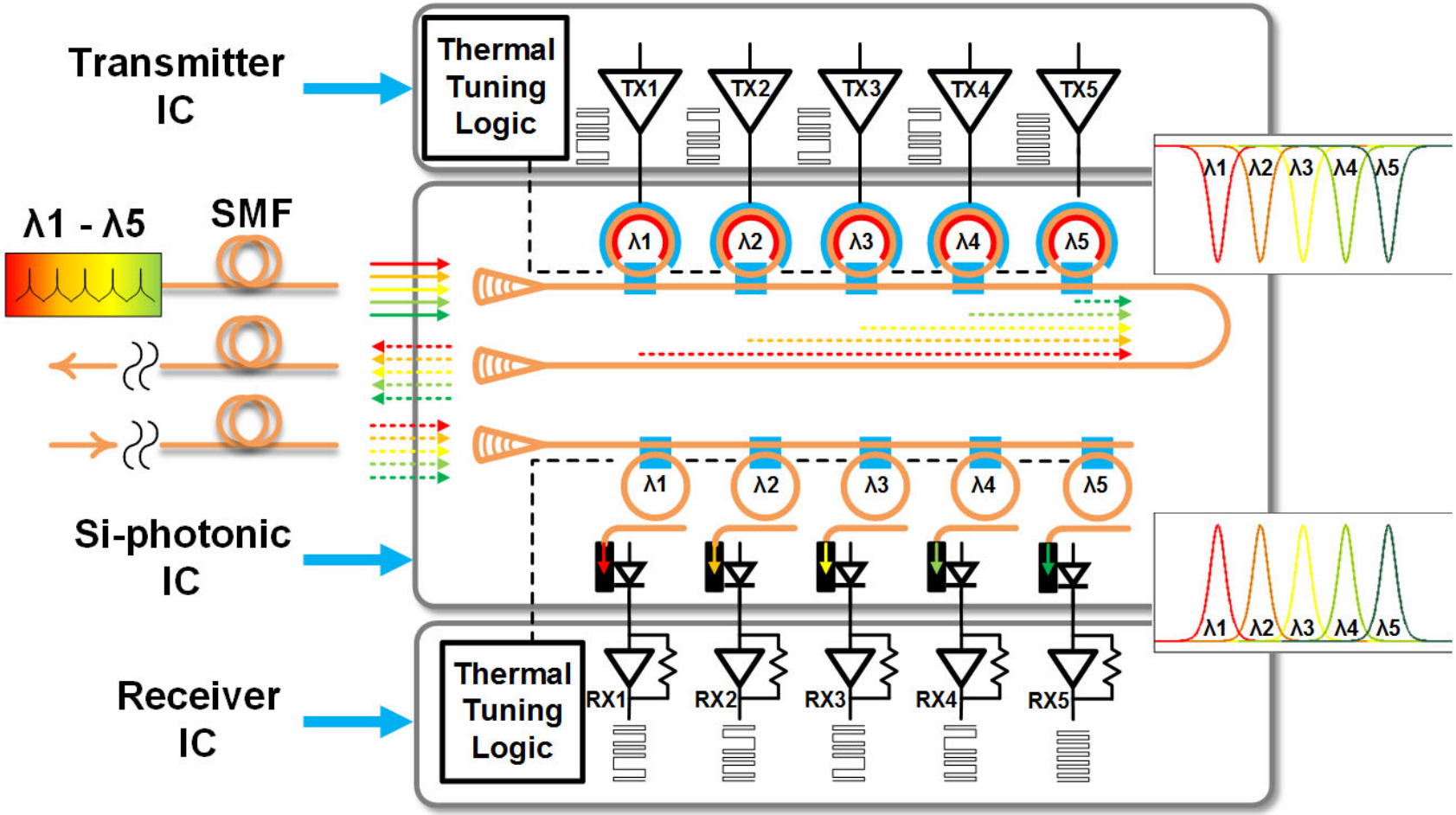

- Ring resonators can act as both modulators and add/drop filters to steer light to receivers or switch light to different waveguides
- Potential to pack >100 wavelengths, each modulated at more than 10Gb/s on a single on-chip waveguide

Carrier-Depletion Ring Modulator Challenge I: Output Swing & Biasing

	ISSCC 2013	This Work
Ring Type	Injection	Depletion
Doping Profile	PIN	Lateral PN
Q	8000	5000
Tunability (pm/V)	350	25
Data Rate	9Gb/s	25Gb/s
Swing for >7dB ER	< $2V_{pp}$	> $4V_{pp}$

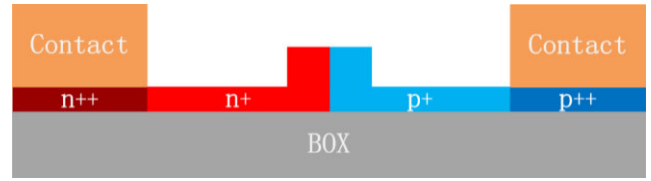

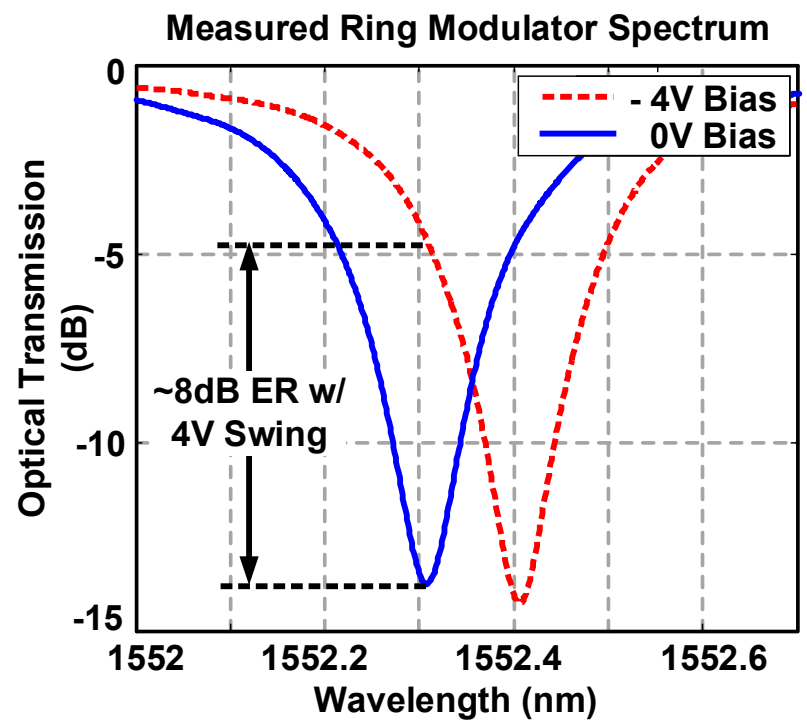

- High-speed depletion-mode ring modulator requires:
  - Large swing: >4V
  - Negative DC-bias: -2V

Carrier-Depletion Ring Modulator Challenge II: Nonlinear Dynamics

Depletion Ring E-O Model

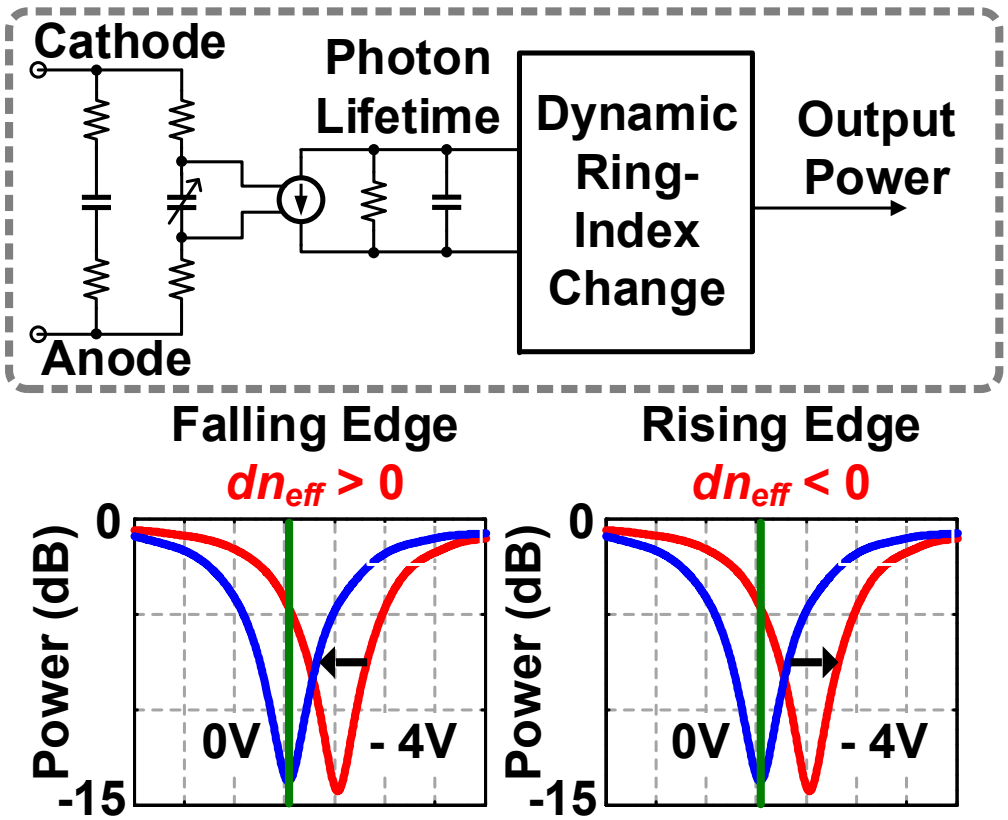

Simulated 25Gb/s Optical Eye Diagram

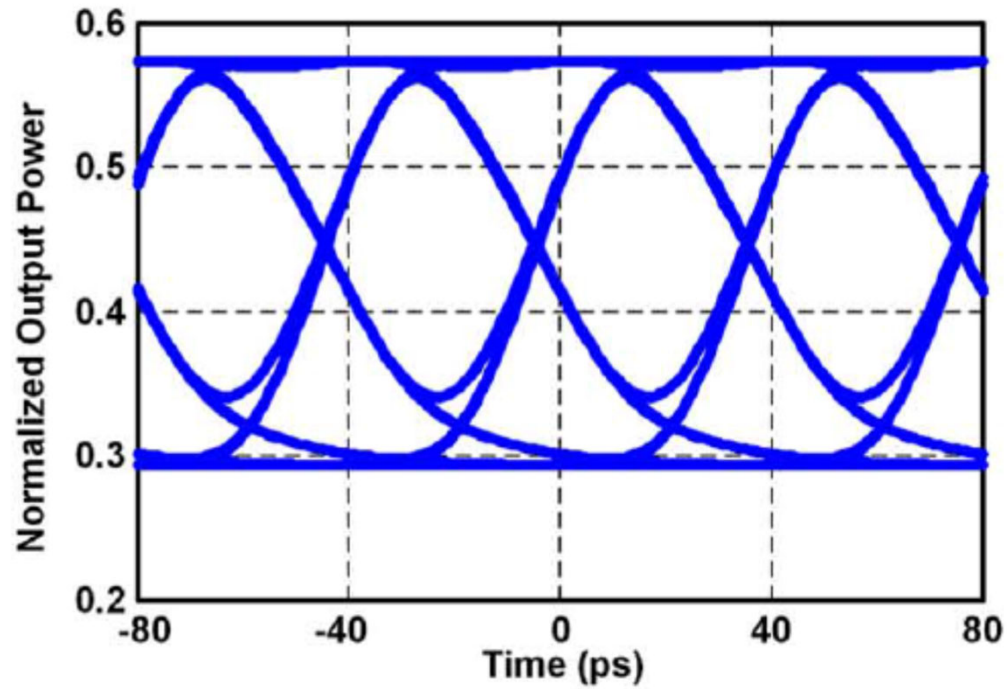

- Dynamic change of n_{eff} → unequal rise/fall times
- Asymmetric equalization for non-linearity cancellation

Carrier-Depletion Ring Modulator Challenge III: Wavelength Stability

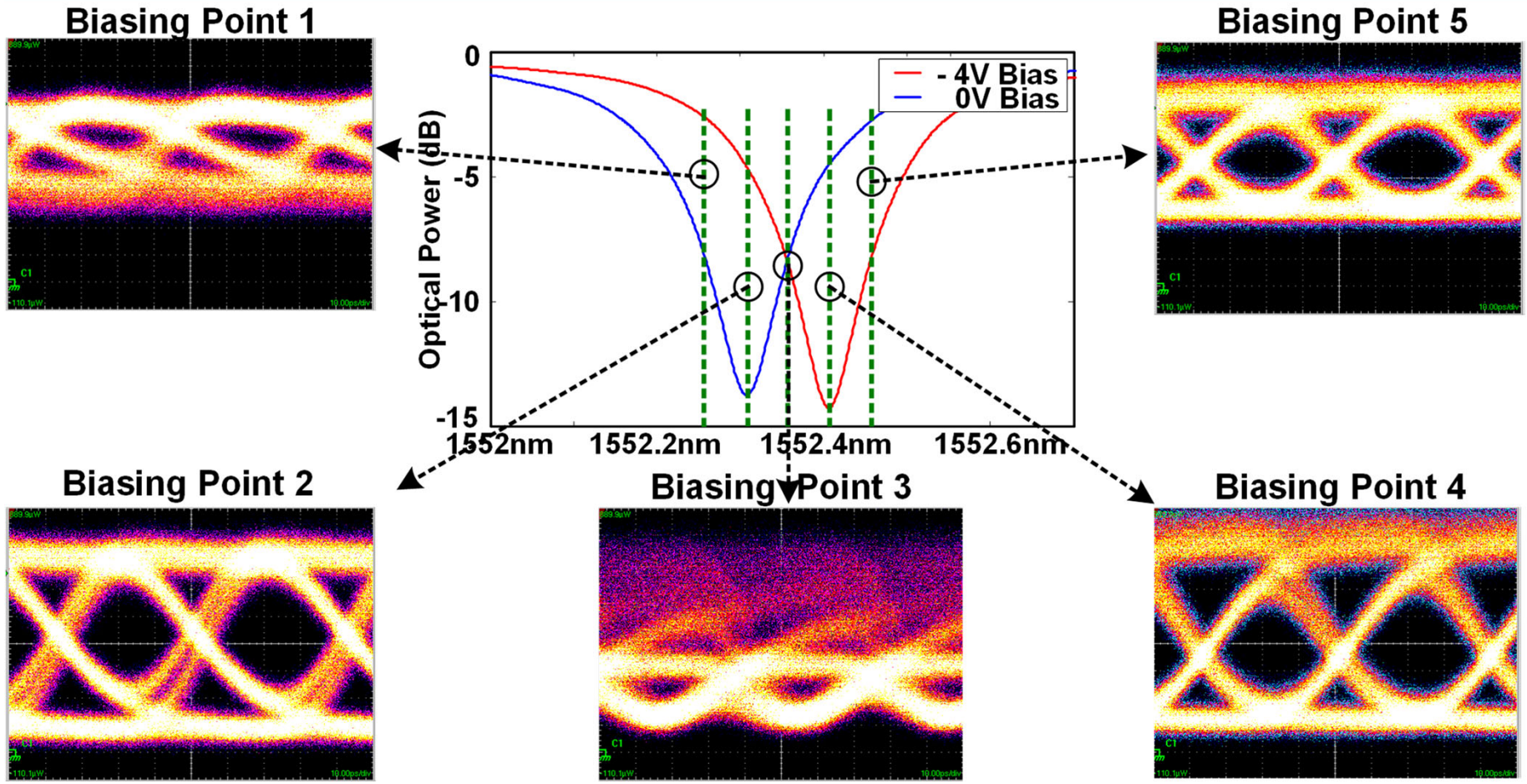

- Modulation efficiency depends strongly on wavelength
- ER degradation due to temperature fluctuation
- Closed-loop control is necessary for robust operation

AC-Coupled Differential Driver

[Li ISSCC 2015]

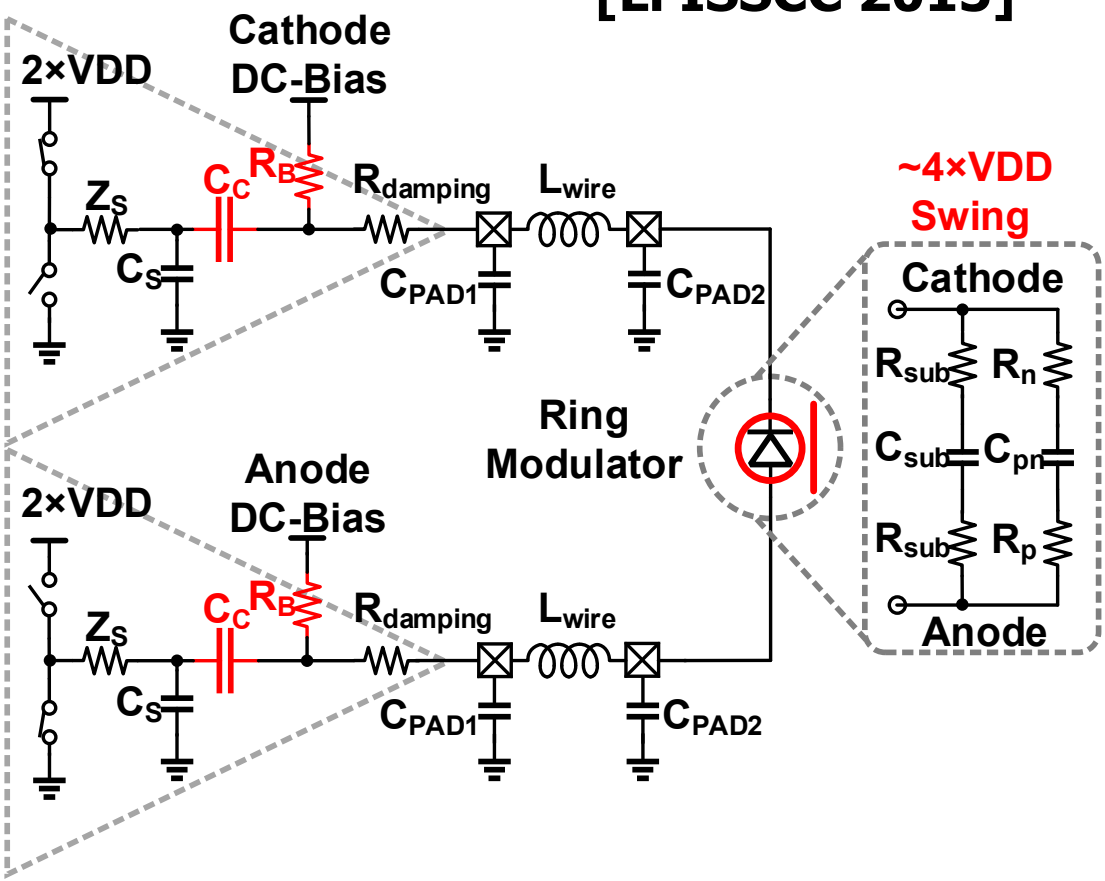

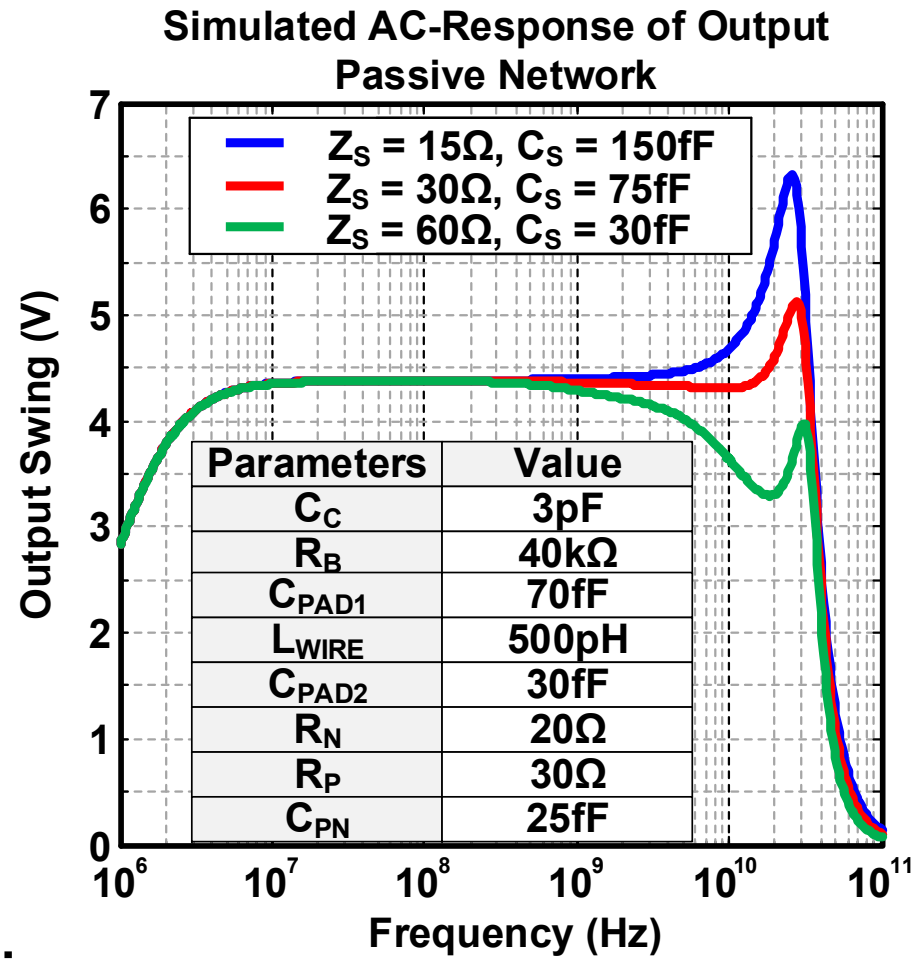

Parameters	Value
C_C	3pF
R_B	40kΩ
C_{PAD1}	70fF
L_{WIRE}	500pH
C_{PAD2}	30fF
R_N	20Ω
R_P	30Ω
C_{PN}	25fF

- C_C = 3pF → 4.4V differential swing
- Z_S < 30Ω to minimize low-pass attenuation
- High-pass cut-off: < 10MHz

2-Tap FFE Output Driver

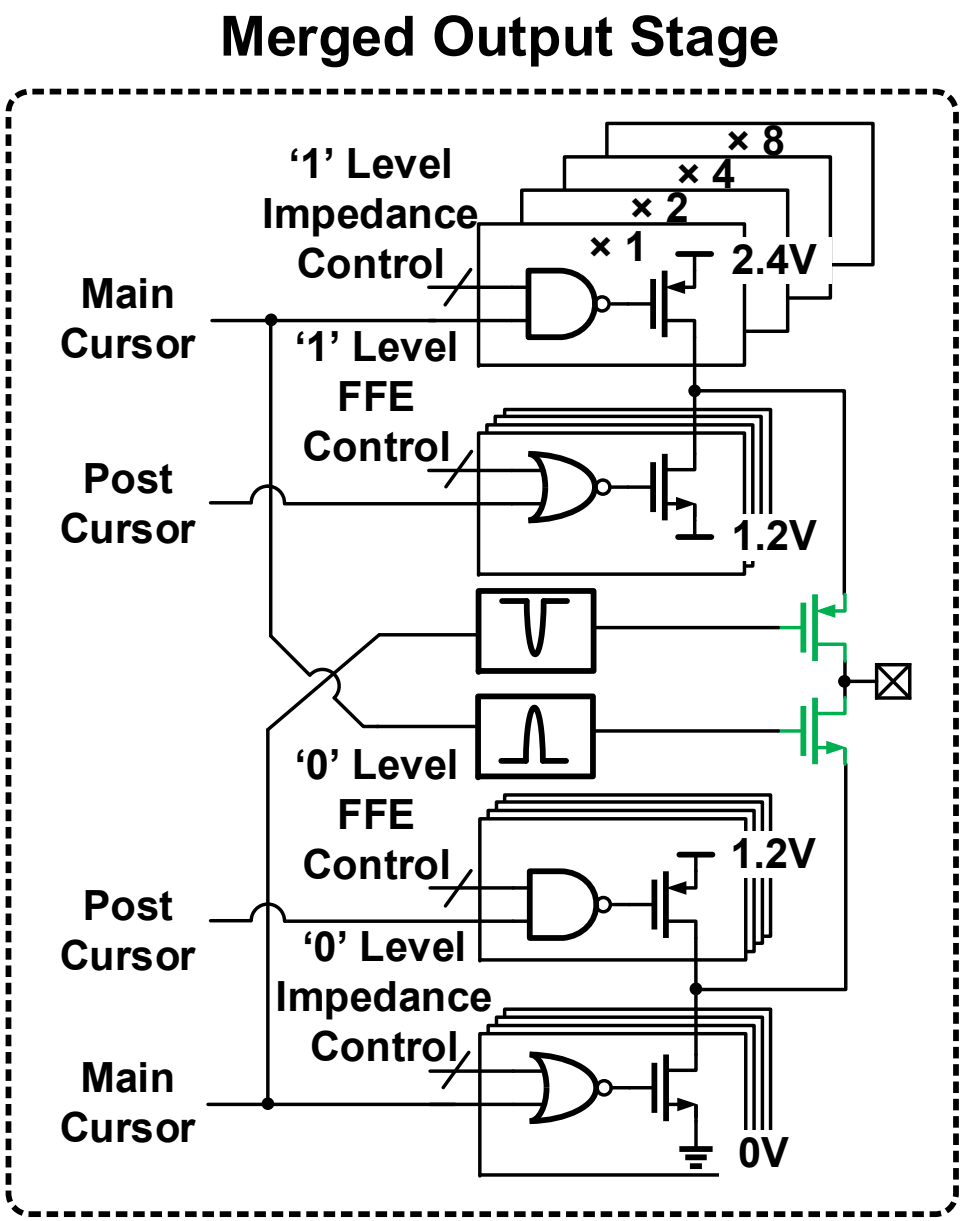

- Merged cascode transistors
- No V_{DS} overstress
- Reduced parasitics and area
- Independent '1'-Level and '0'-Level FFE coefficients

Average Power Thermal Stabilization

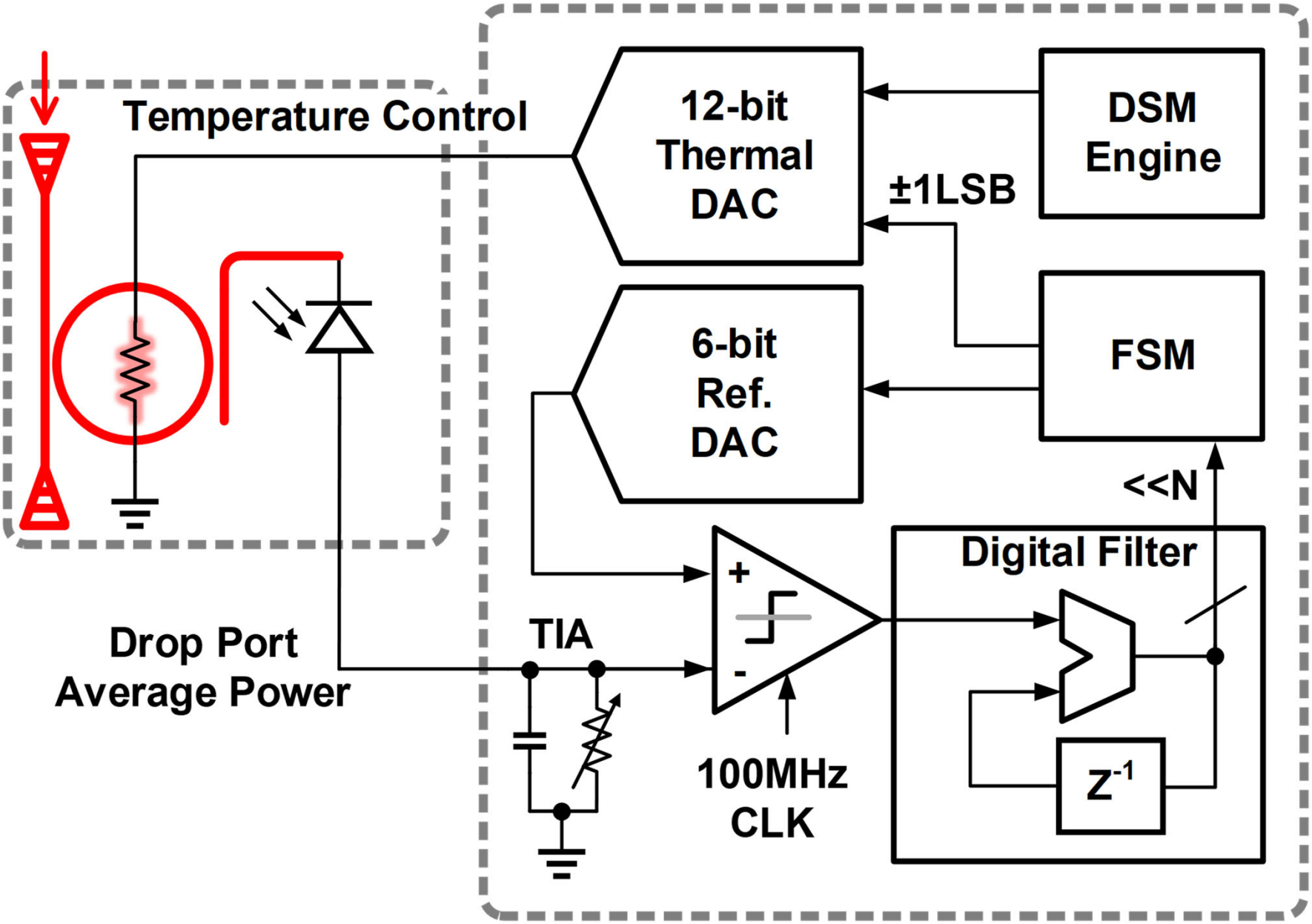

Heterogeneous Integration

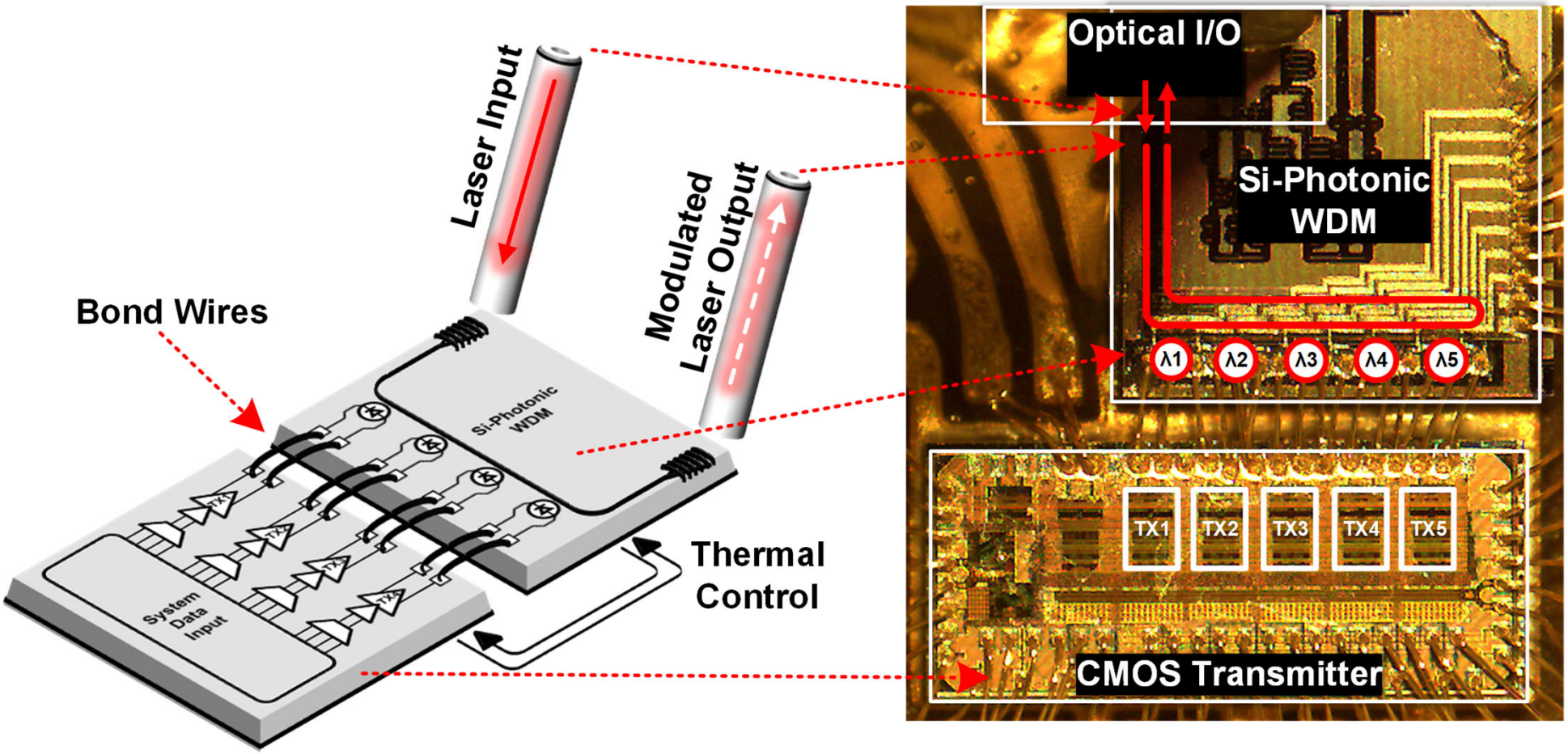

- Hybrid CMOS-Photonic packaging (<0.5mm bond-wires)
- Stable optical coupling using vertically-attached fibers

25Gb/s Optical Measurement

Test Channel 1
w/o FFE

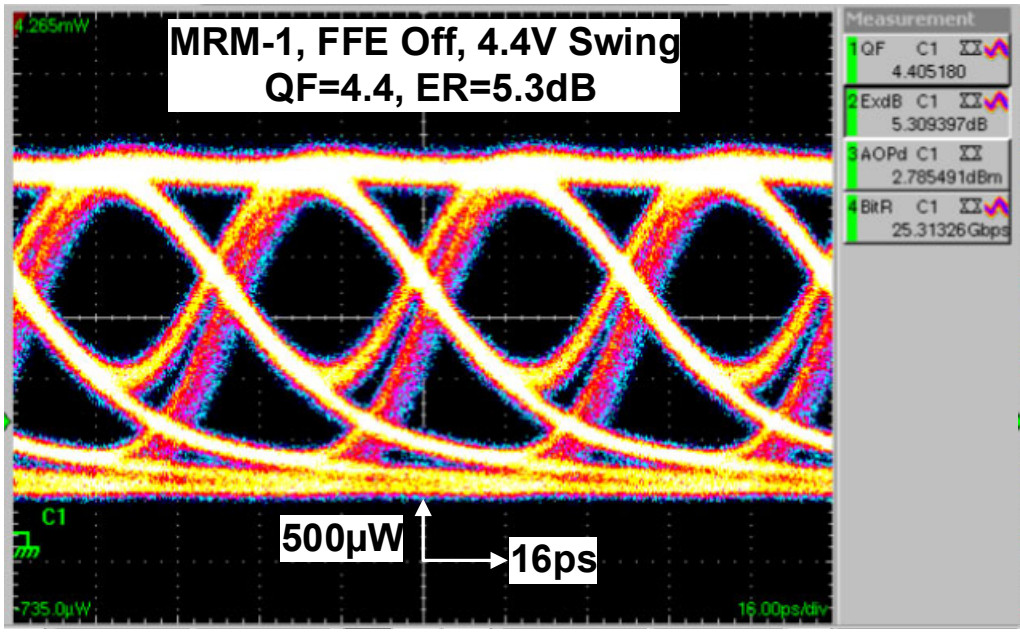

Test Channel 1
w/ Asymmetric FFE

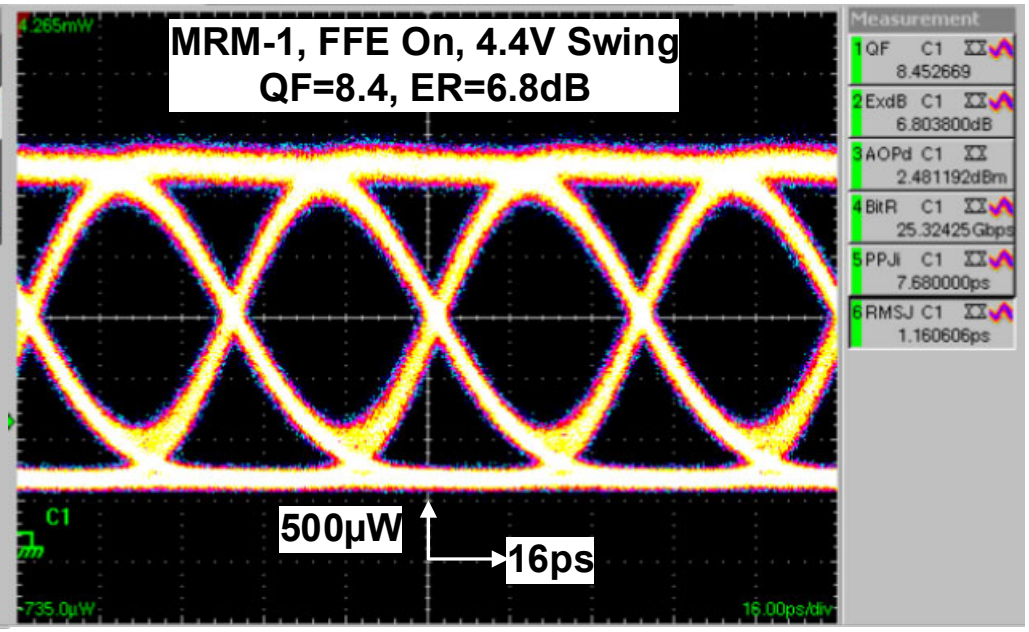

Dynamic Thermal Tracking Test

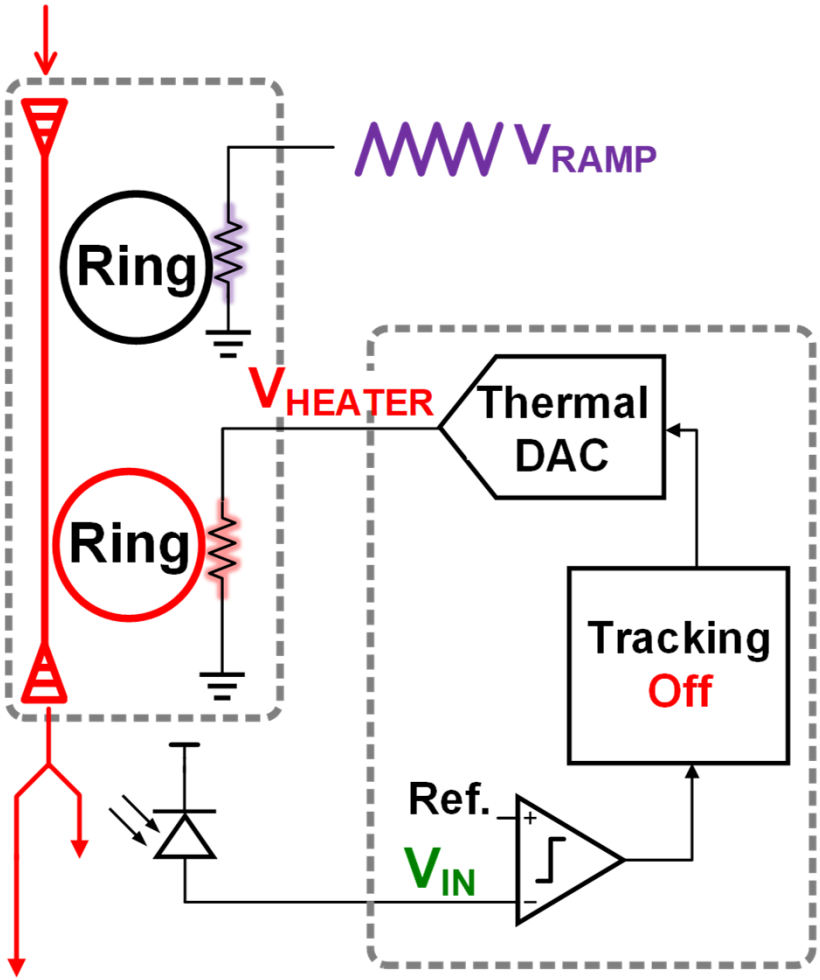

Tracking Off

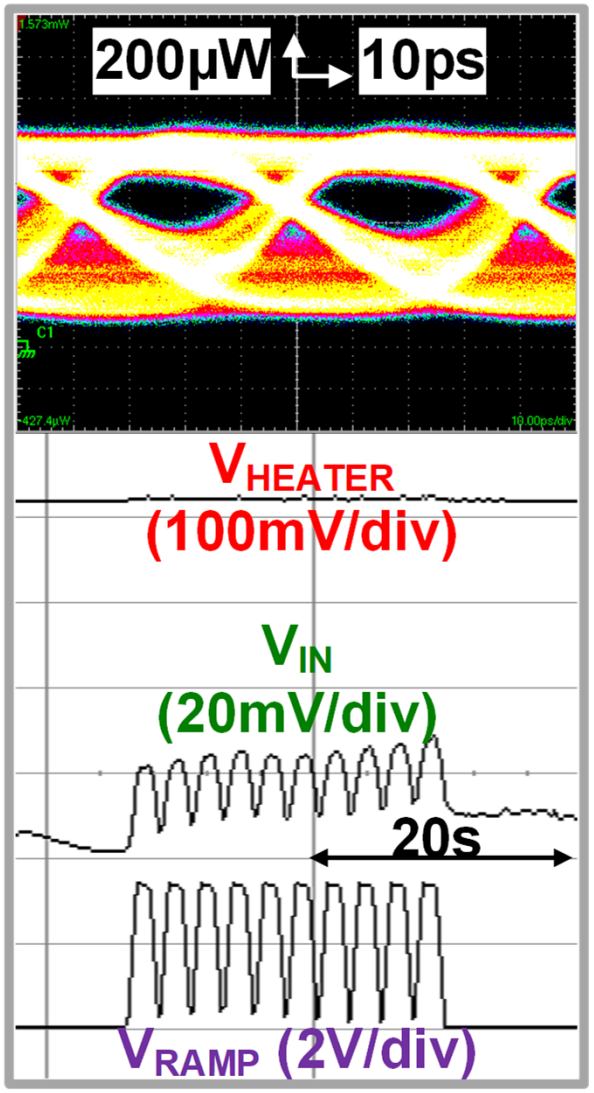

Dynamic Thermal Tracking Test

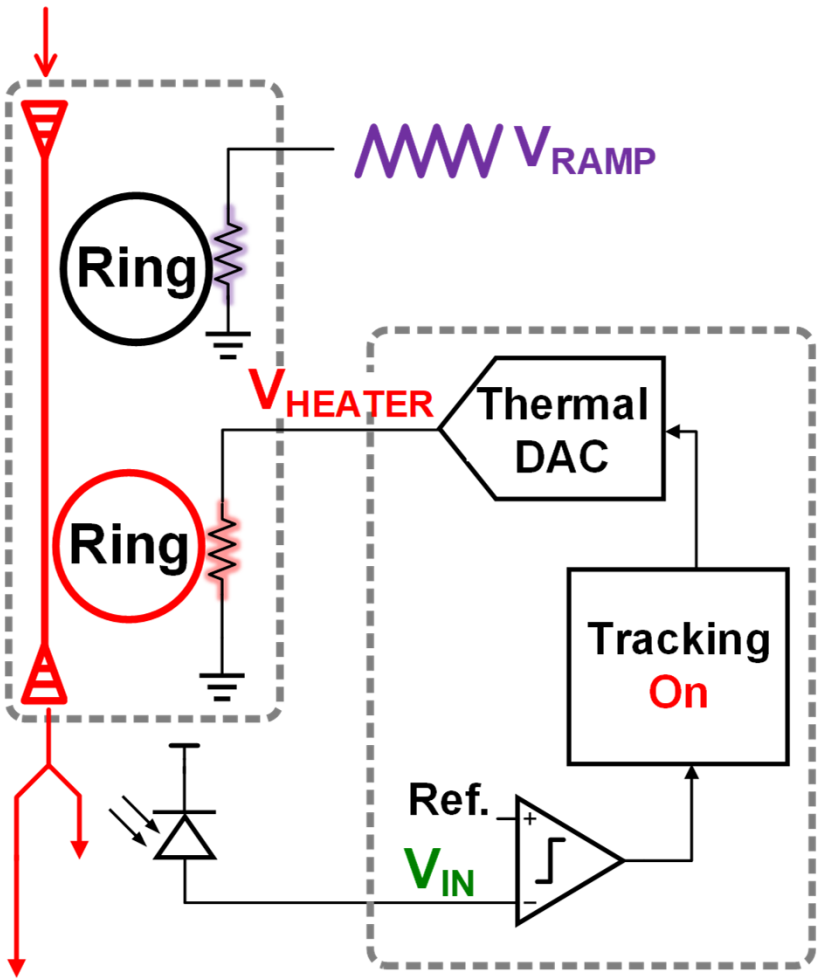

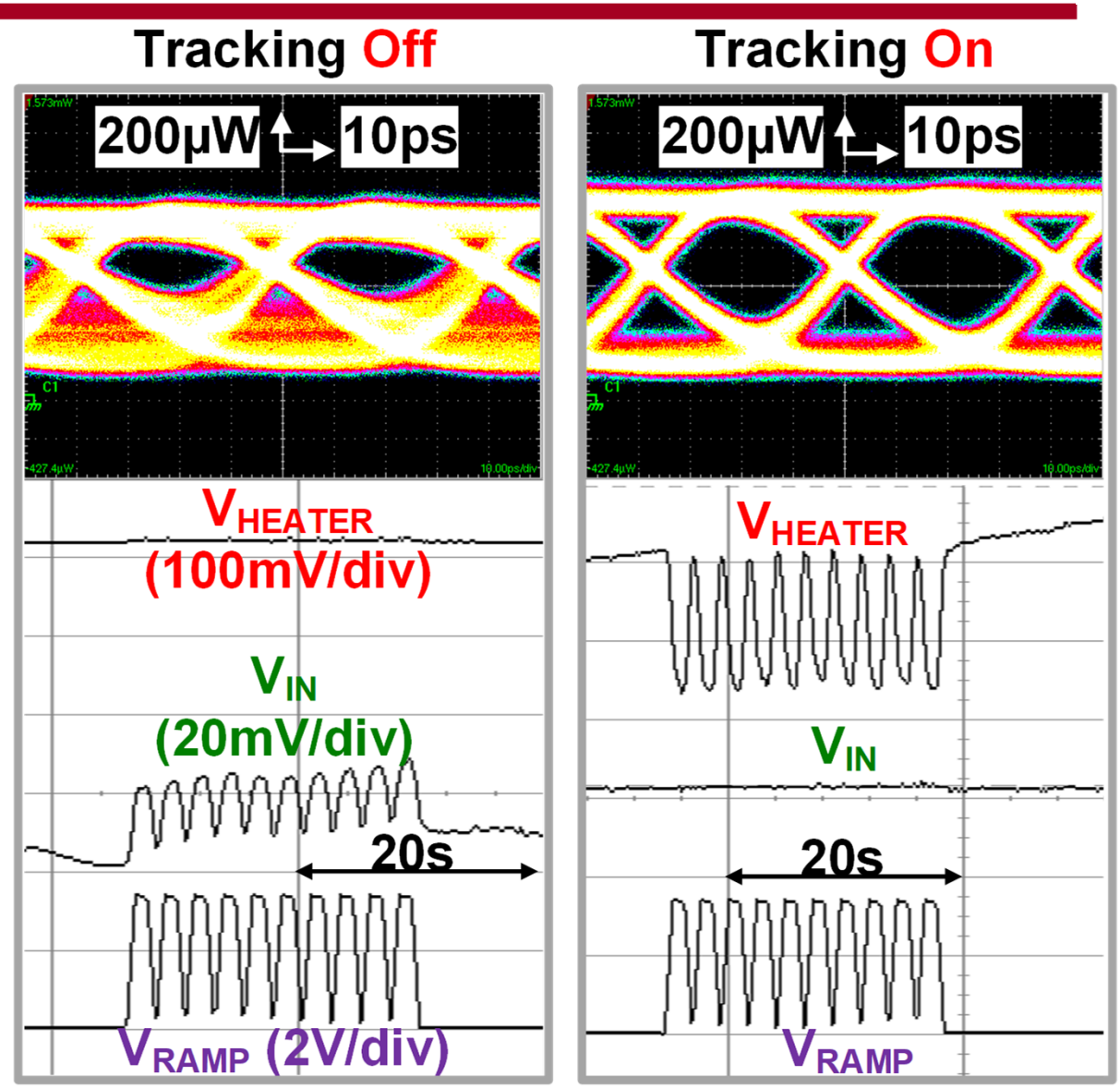

112Gb/s PAM4 Transmitter

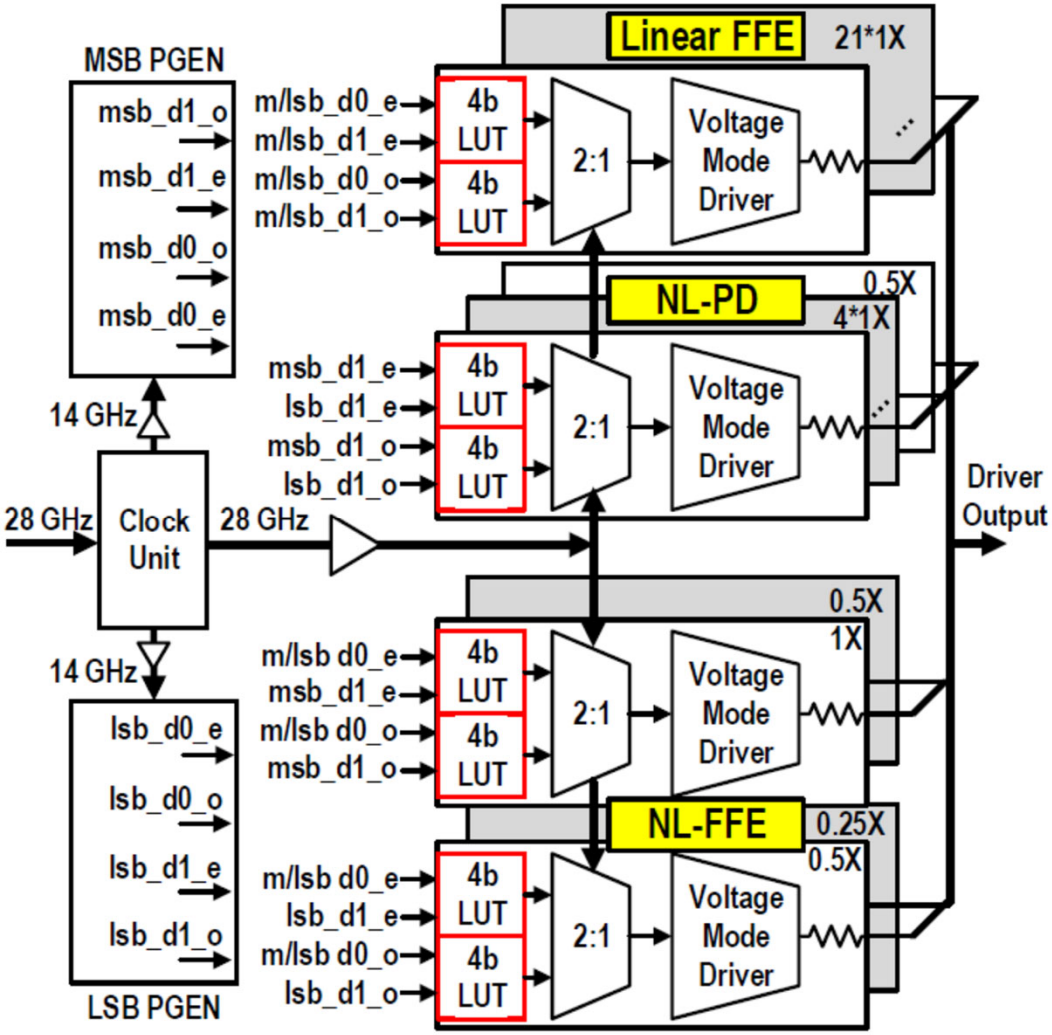

[Li ISSCC 2020]

- Look-up table (LUT) DAC-based output stage
- 2-tap linear FFE (21X slices)
- Non-linear static pre-distortion (4.5X slices)
- Nonlinear 2-tap FFE (2.25X slices)

112Gb/s DAC Output

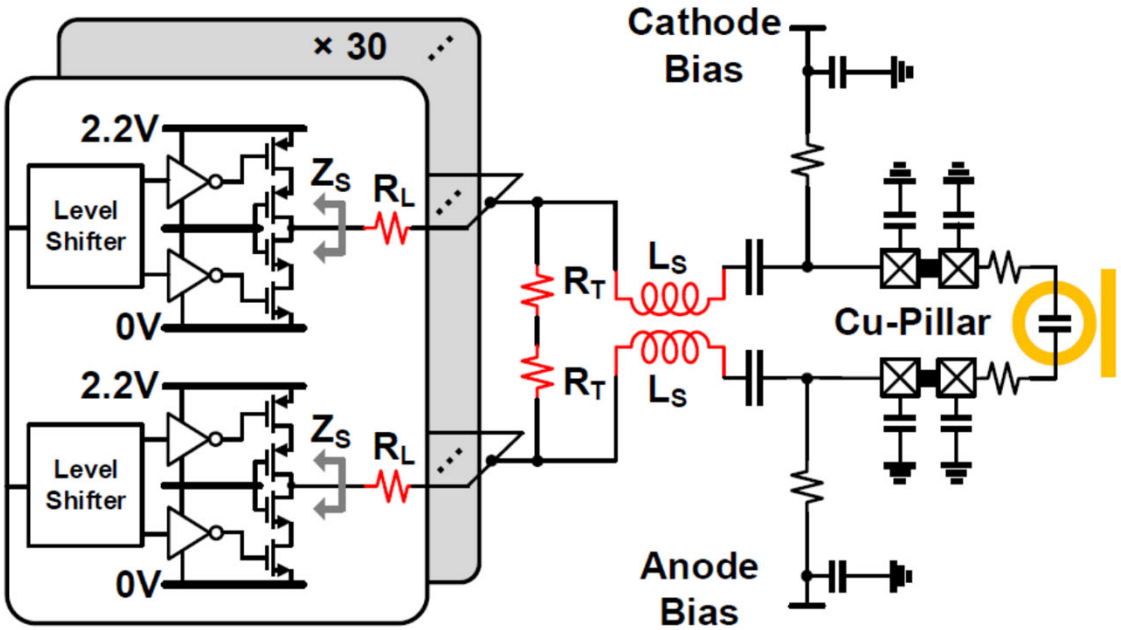

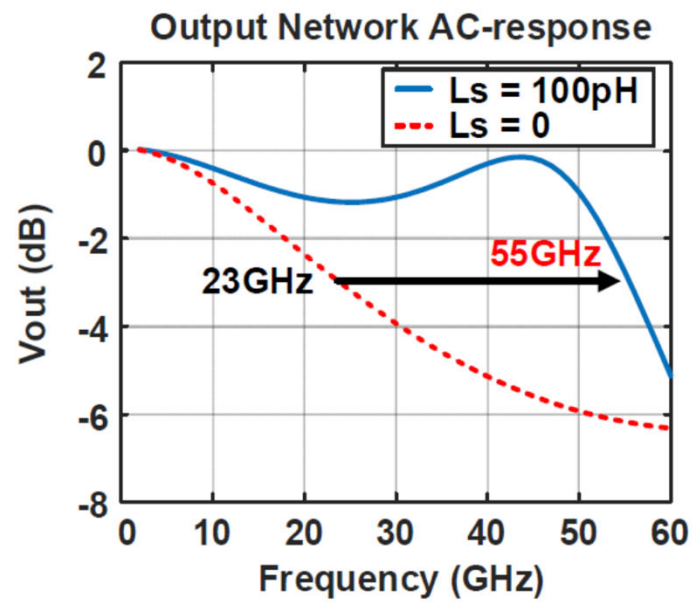

- Differential cascade output driver w/ level shifted pre-drivers
- Per-slice series R_L and lumped shunt R_T improve linearity at the cost of reduced output swing ($3V_{ppd}$)
- Series peaking inductor provides significant bandwidth extension

112Gb/s PAM4 Eye Diagrams

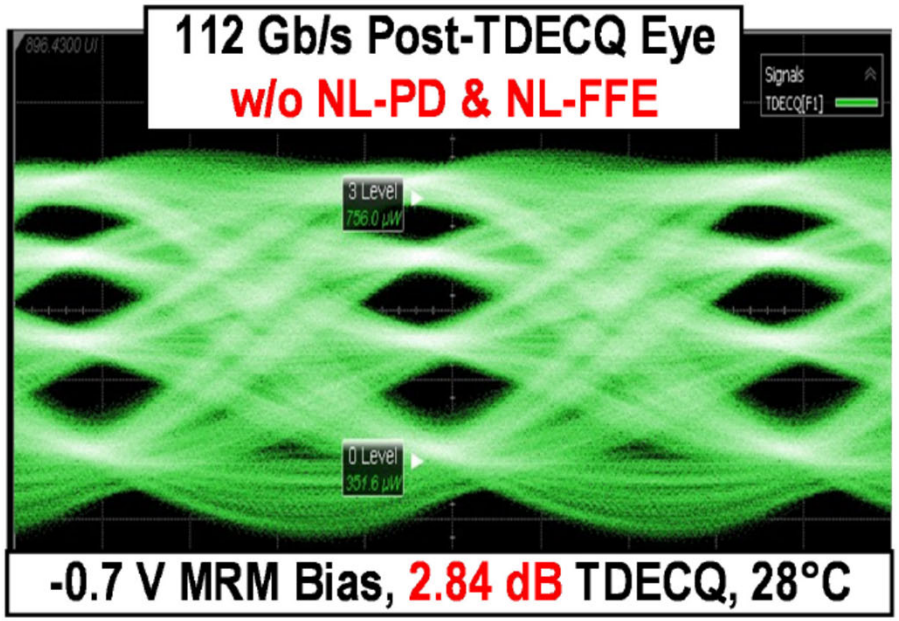

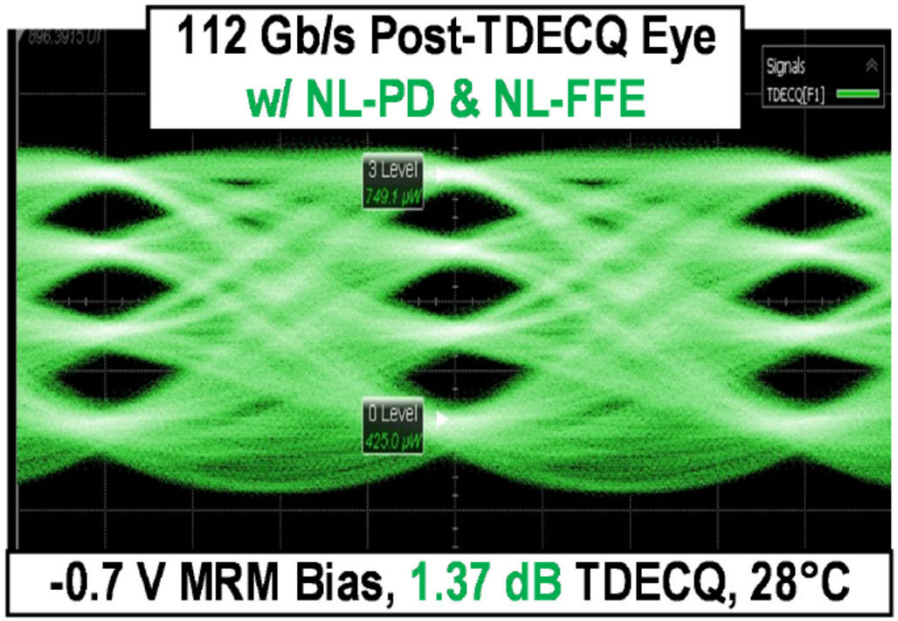

- Utilizing only linear FFE results in significant eye skew and poor TDECQ
- Enabling the non-linear pre-distortion and FFE aligns the 3 eyes and improves TDECQ by ~1.5dB

Conclusion

- The desired link reach impacts optical transmitter choice
- High-speed transmitter circuits must be optimized for a specific optical source
- VCSELs are typically driven by current-mode drivers and employ equalization to extend data rate
- MZMs are relatively large devices that must be driven with either controlled impedance drivers or multi-segment drivers that are tightly integrated with the PIC
- EAMs are smaller and can be driven as a lumped element with high-swing voltage-mode drivers
- RRMs allow for inherent WDM and can be driven as a lumped element with high-swing voltage-mode drivers, but require resonant wavelength stabilization