ECEN620: Network Theory Broadband Circuit Design Fall 2023

Lecture 2: Linear Circuit Analysis Review

Sam Palermo
Analog & Mixed-Signal Center
Texas A&M University

Agenda

- Transfer Functions
- Mason's Rule
- Second-Order Systems
- Review Material
  - Laplace Transform
  - Passive Circuit s-Domain Models
  - Transfer Functions
  - Sinusoidal Steady-State Response
  - Poles & Zeros
  - Bode Plots

Transfer Function

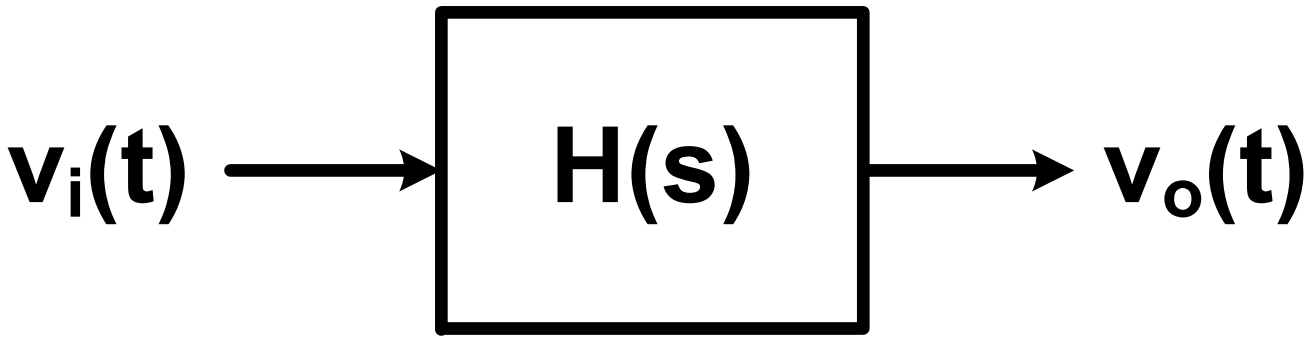

$$H(s) = \frac{\mathcal{L}\{v_o(t)\}}{\mathcal{L}\{v_i(t)\}} = \frac{V_o(s)}{V_i(s)}$$

- The transfer function H(s) of a network is the ratio of the Laplace transform of the output and input signals when the initial conditions are zero
- This is also the Laplace transform of the network's impulse response

Sinusoidal Steady-State Response

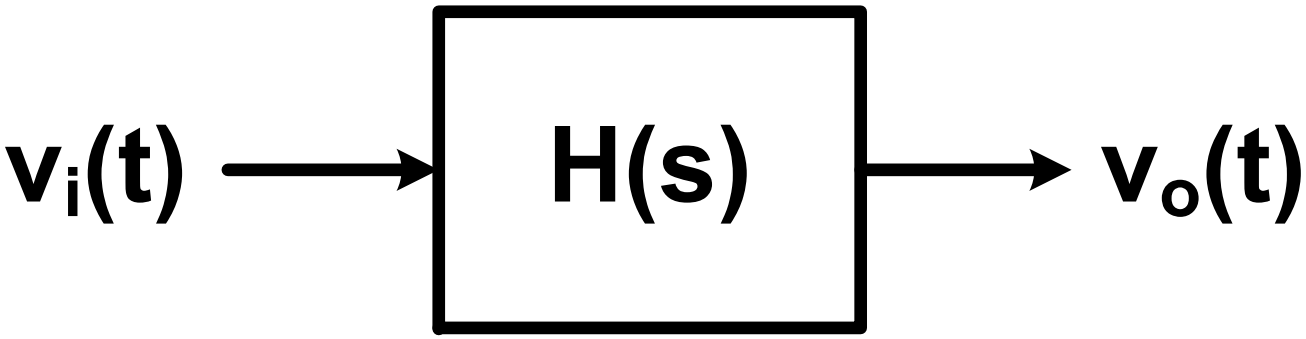

If input $v_i(t)$ is sinusoidal

$$v_i(t) = A\cos(\omega t + \phi)$$

The steady - state output will be

$$v_{ss}(t) = |H(j\omega)| A\cos(\omega t + \phi + \angle H(j\omega))$$

Mason's Rule

[Franklin]

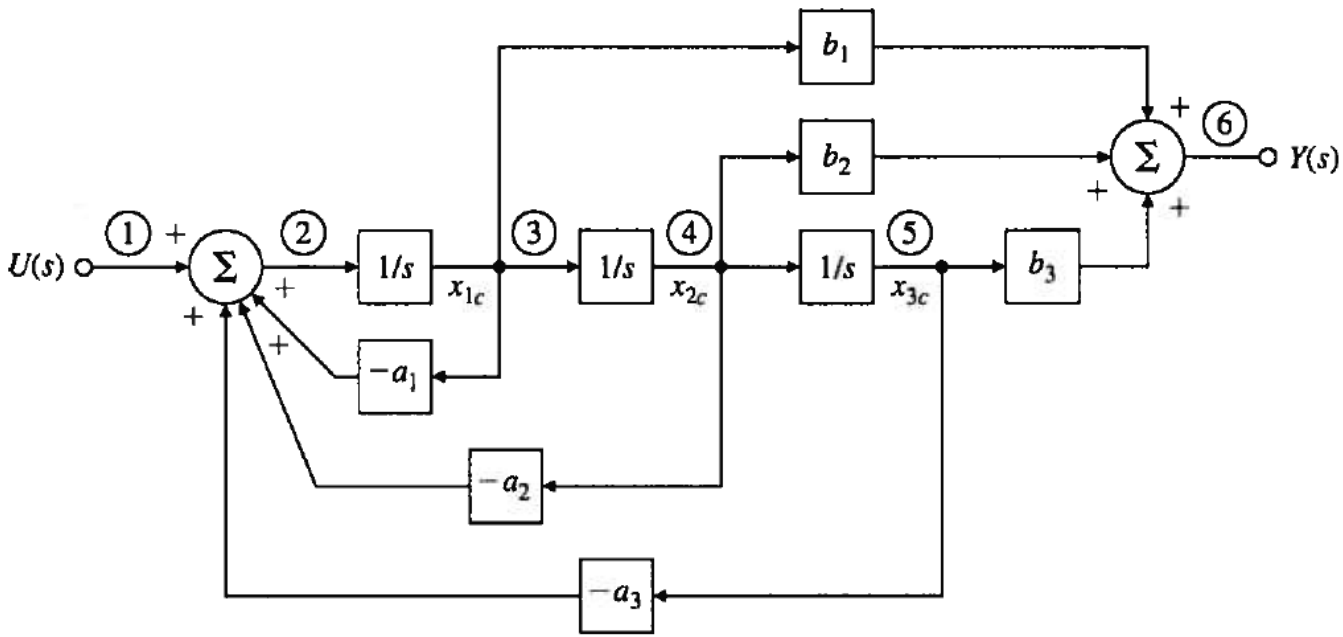

- Mason's Rule is useful to find the transfer function of complex networks
- For Mason's Rule, you need to find the following
  - The direct (forward) path(s) from the input(s) to output
  - The system loops
  - The loops that do not touch the forward path(s)
  - Loops that don't touch, i.e. share elements or nodes

Mason's Rule

[Franklin]

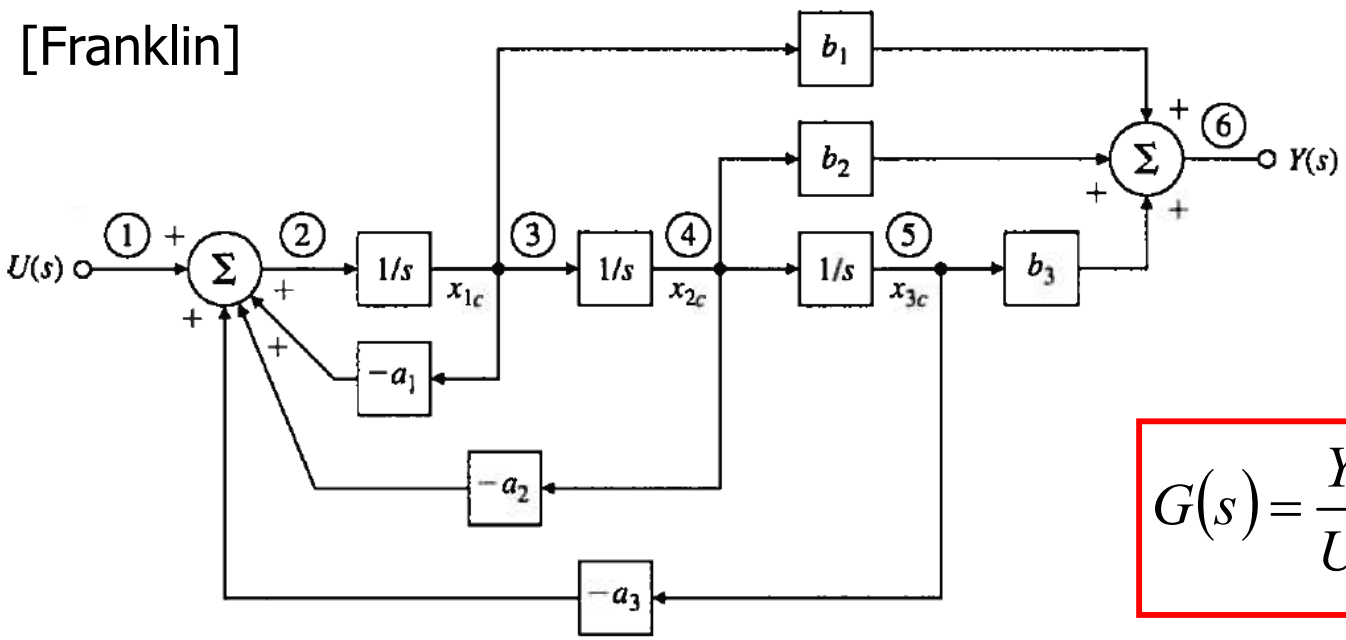

$$G(s) = \frac{Y(s)}{U(s)} = \frac{1}{\Delta}\sum_i G_i \Delta_i$$

G_i = path gain of the ith forward path

Δ = the system determinant = 1 – Σ(all individual loop gains) + Σ(gain products of all possible two loops that do not touch) – Σ(gain products of all possible three loops that do not touch) + …

Δ_i = ith forward path determinant = value of Δ for that part of the block diagram that does not touch the ith forward path

Mason's Rule Example 1

[Franklin]

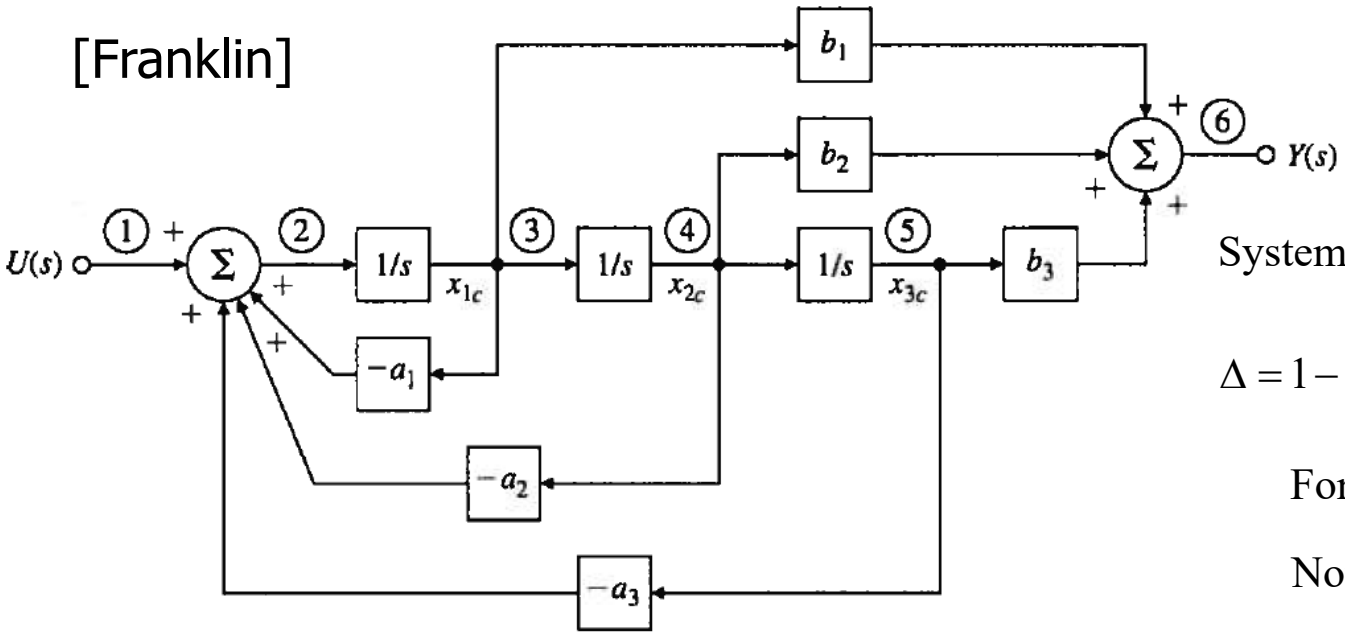

$$G(s) = \frac{Y(s)}{U(s)} = \frac{1}{\Delta}\sum_i G_i \Delta_i$$

System Determinant : Note, all loops touch

$$\Delta = 1 - \left(-\frac{a_1}{s} - \frac{a_2}{s^2} - \frac{a_3}{s^3}\right) + 0 = 1 + \frac{a_1}{s} + \frac{a_2}{s^2} + \frac{a_3}{s^3}$$

Forward Path Determinants

Note, all loops touch the forward paths

$$\Delta_1 = 1 - 0 = 1$$

$$\Delta_2 = 1 - 0 = 1$$

$$\Delta_3 = 1 - 0 = 1$$

Forward Path Gains

$$G_1 = 1236 = \frac{b_1}{s}$$

$$G_2 = 12346 = \frac{b_2}{s^2}$$

$$G_3 = 123456 = \frac{b_3}{s^3}$$

Loop Gains

$$l_1 = 232 = -\frac{a_1}{s}$$

$$l_2 = 2342 = -\frac{a_2}{s^2}$$

$$l_3 = 23452 = -\frac{a_3}{s^3}$$

System Transfer Function

$$\frac{Y(s)}{U(s)} = \frac{\frac{b_1}{s} + \frac{b_2}{s^2} + \frac{b_3}{s^3}}{1 + \frac{a_1}{s} + \frac{a_2}{s^2} + \frac{a_3}{s^3}} = \frac{b_1 s^2 + b_2 s + b_3}{s^3 + a_1 s^2 + a_2 s + a_3}$$

Mason's Rule Example 2

[Franklin]

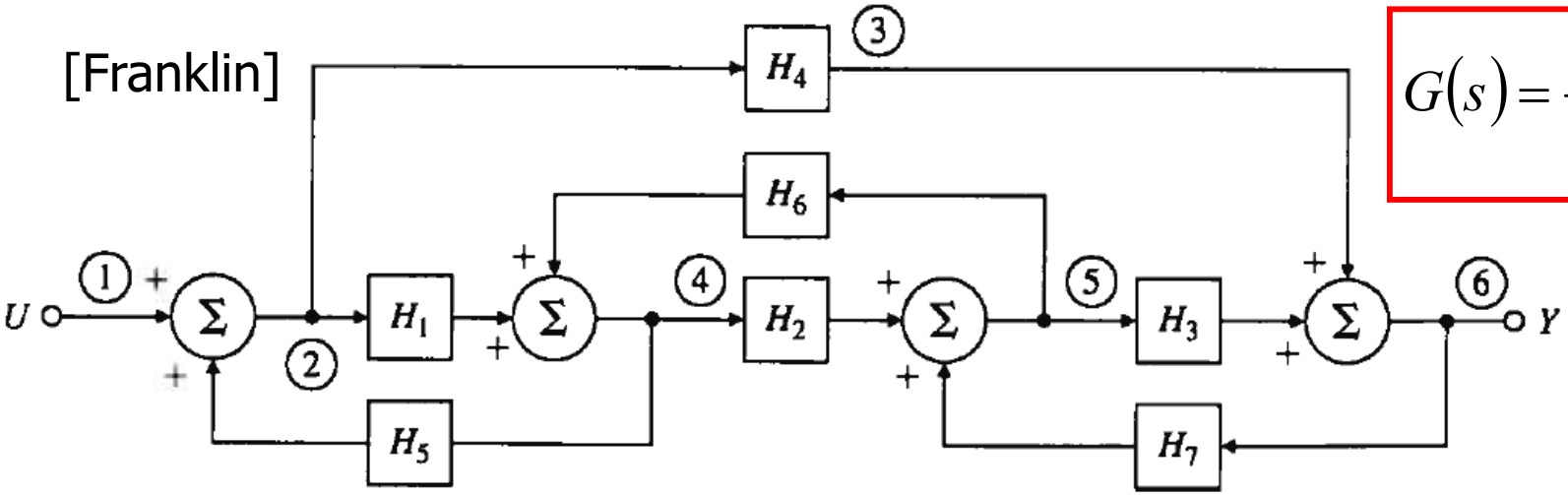

$$G(s) = \frac{Y(s)}{U(s)} = \frac{1}{\Delta}\sum_i G_i \Delta_i$$

Forward Path Gains

$G_1 = 1236 = H_4$

$G_2 = 12456 = H_1 H_2 H_3$

Loop Gains

$l_1 = 242 = H_1 H_5$ (does not touch l_3)

$l_2 = 454 = H_2 H_6$

$l_3 = 565 = H_3 H_7$ (does not touch l_1)

$l_4 = 236542 = H_4 H_7 H_6 H_5$

System Determinant : Note, 2 loops don't touch

$$\Delta = 1 - (H_1 H_5 + H_2 H_6 + H_3 H_7 + H_4 H_7 H_6 H_5) + (H_1 H_5 H_3 H_7)$$

Forward Path Determinants

Note, l_2 does not touch G_1

$\Delta_1 = 1 - H_2 H_6$

$\Delta_2 = 1 - 0 = 1$

System Transfer Function

$$\frac{Y(s)}{U(s)} = \frac{H_4(1 - H_2 H_6) + H_1 H_2 H_3}{1 - (H_1 H_5 + H_2 H_6 + H_3 H_7 + H_4 H_7 H_6 H_5) + H_1 H_5 H_3 H_7}$$

Second-Order Systems

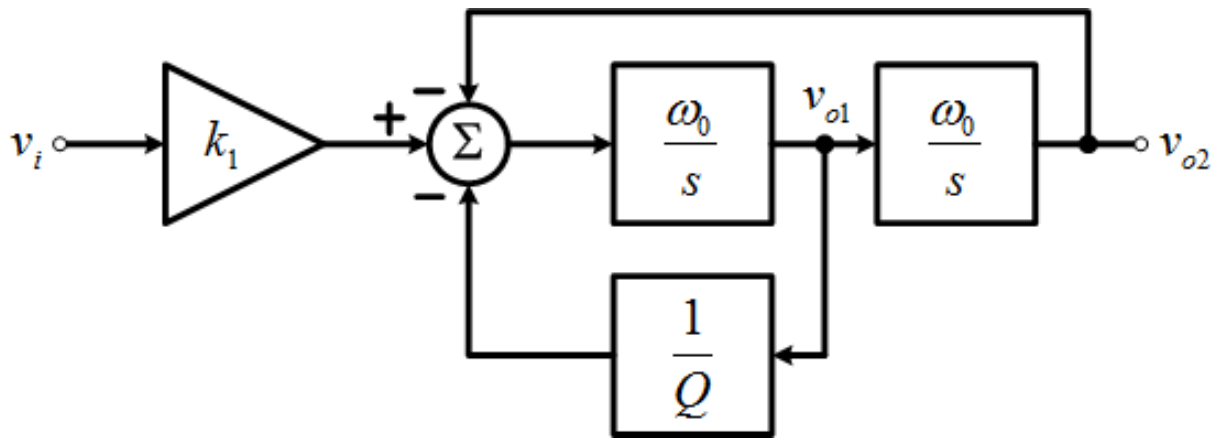

$$G(s) = \frac{Y(s)}{U(s)} = \frac{1}{\Delta}\sum_i G_i \Delta_i$$

Forward Path Gain

$$G_1 = k_1\left(\frac{\omega_0}{s}\right)^2$$

Loop Gains

$$l_1 = -\frac{\omega_0}{sQ}$$

$$l_2 = -\left(\frac{\omega_0}{s}\right)^2$$

System Determinant : Note, all loops touch

$$\Delta = 1 - \left(-\frac{\omega_0}{sQ} - \left(\frac{\omega_0}{s}\right)^2\right) + 0 = 1 + \frac{\omega_0}{sQ} + \left(\frac{\omega_0}{s}\right)^2$$

Forward Path Determinant

Note, all loops touch the forward path

$$\Delta_1 = 1 - 0 = 1$$

System Transfer Function

$$H(s) = \frac{V_{o2}(s)}{V_i(s)} = \frac{k_1\left(\frac{\omega_0}{s}\right)^2}{1 + \frac{\omega_0}{sQ} + \left(\frac{\omega_0}{s}\right)^2} = \frac{k_1\omega_0^2}{s^2 + s\frac{\omega_0}{Q} + \omega_0^2}$$

Second-Order Systems: Real or Complex Poles?

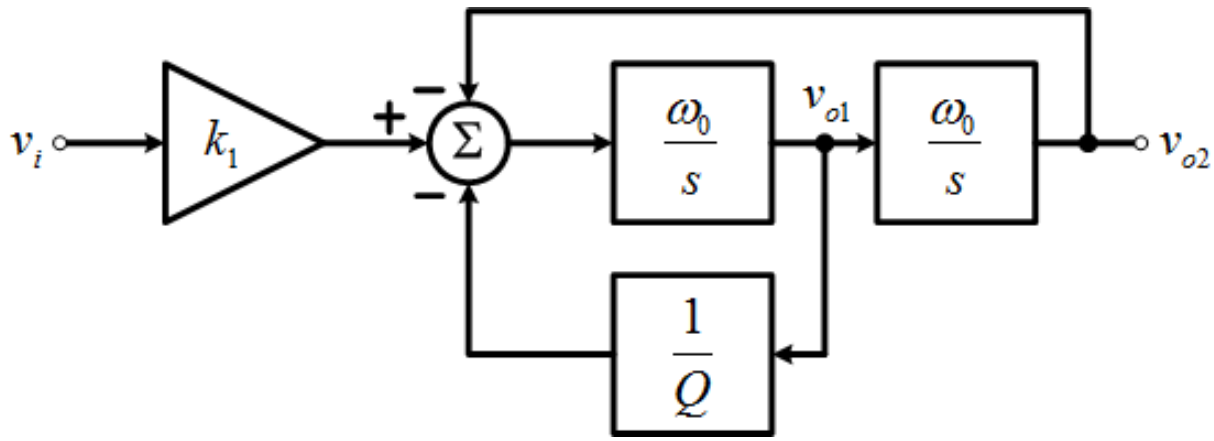

$$H(s) = \frac{k_1 \omega_0^2}{s^2 + s\frac{\omega_0}{Q} + \omega_0^2}$$

$$\text{2 poles } p_1, p_2 = -\frac{\omega_0}{2Q} \pm \sqrt{\left(\frac{\omega_0}{2Q}\right)^2 - \omega_0^2}$$

$$\boxed{\begin{array}{c} \text{2 real poles if } \quad Q \le 0.5 \\ \text{2 complex conjugate poles if } Q > 0.5 \end{array}}$$

Bode Plots

- Technique to plot the **Magnitude** (squared) and **Phase** response of a transfer function
  - Magnitude is plotted in Decibels (dB), which is a power ratio unit

$$\left|H(j\omega)\right|^2 \overset{dB}{\Rightarrow} 10\log_{10}\left(\left|H(j\omega)\right|^2\right)(\mathrm{dB}) = 20\log_{10}\left(\left|H(j\omega)\right|\right)(\mathrm{dB})$$

  - Phase is typically plotted in degrees

$$\angle\left(H(j\omega)\right) = \tan^{-1}\left(\frac{\mathrm{Im}\left(H(j\omega)\right)}{\mathrm{Re}\left(H(j\omega)\right)}\right)$$

Second-Order Systems – Real Poles (1)

$$H(s) = \frac{10^4}{s^2 + 1001s + 1000} = \frac{10^4}{(s+1)(s+1000)}$$

$$2\,\text{poles}:\ p_1 = -1,\ \ p_2 = -1000$$

$$\text{Note},\ Q = 0.032$$

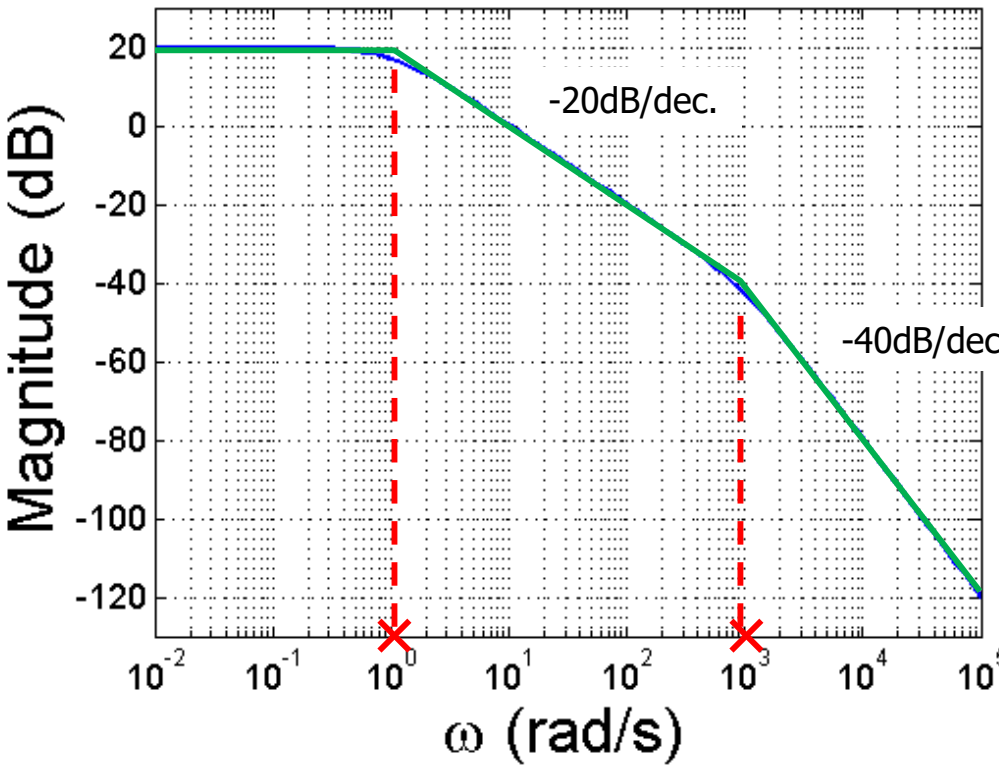

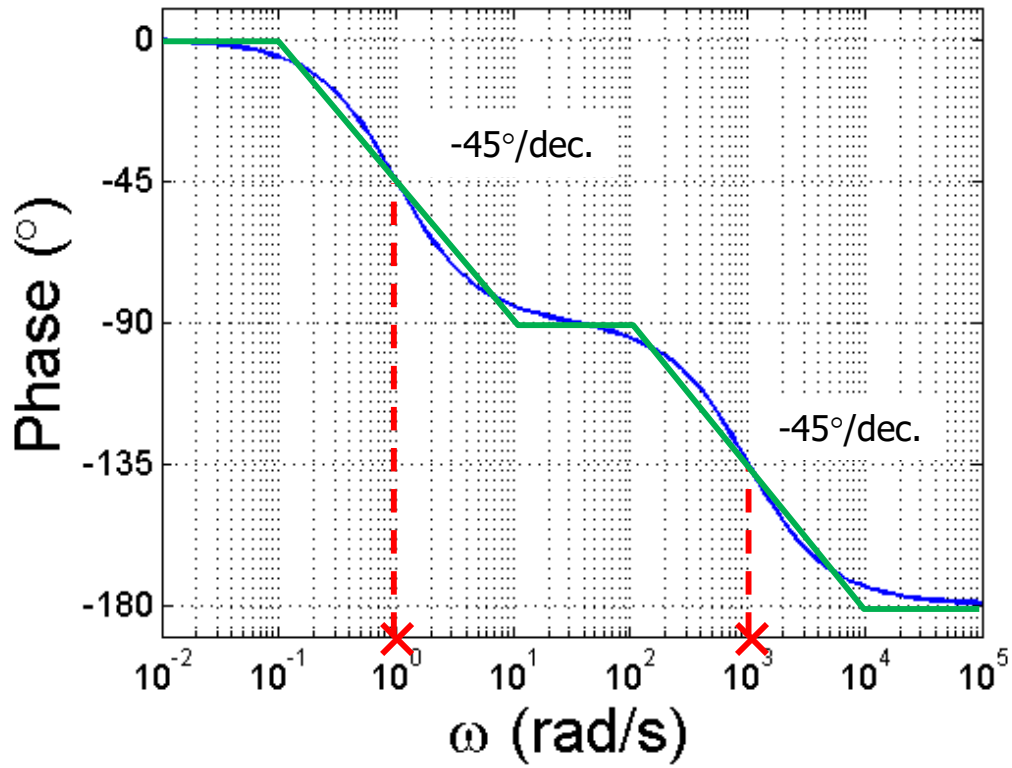

- If poles are spaced by more than 2 decades, there are 2 distinct regions of -45°/dec phase slope

Second-Order Systems – Real Poles (2)

$$H(s) = \frac{100}{s^2 + 11s + 10} = \frac{100}{(s+1)(s+10)}$$

$$2\text{ poles}: \; p_1 = -1, \; p_2 = -10$$

$$\text{Note}, \; Q = 0.287$$

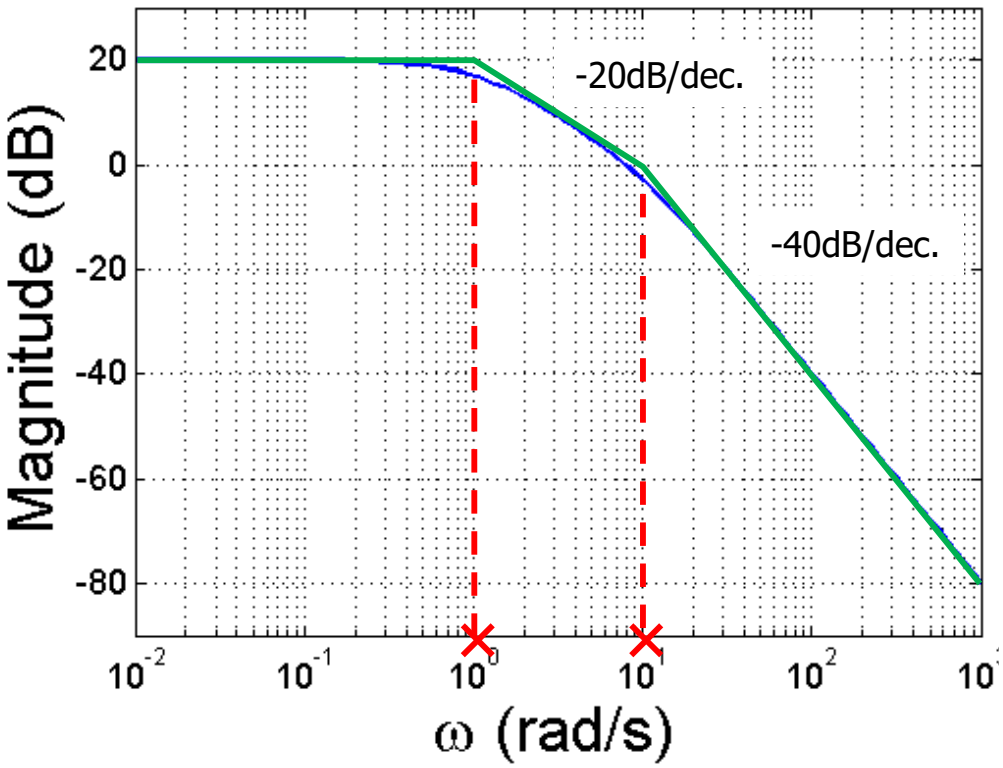

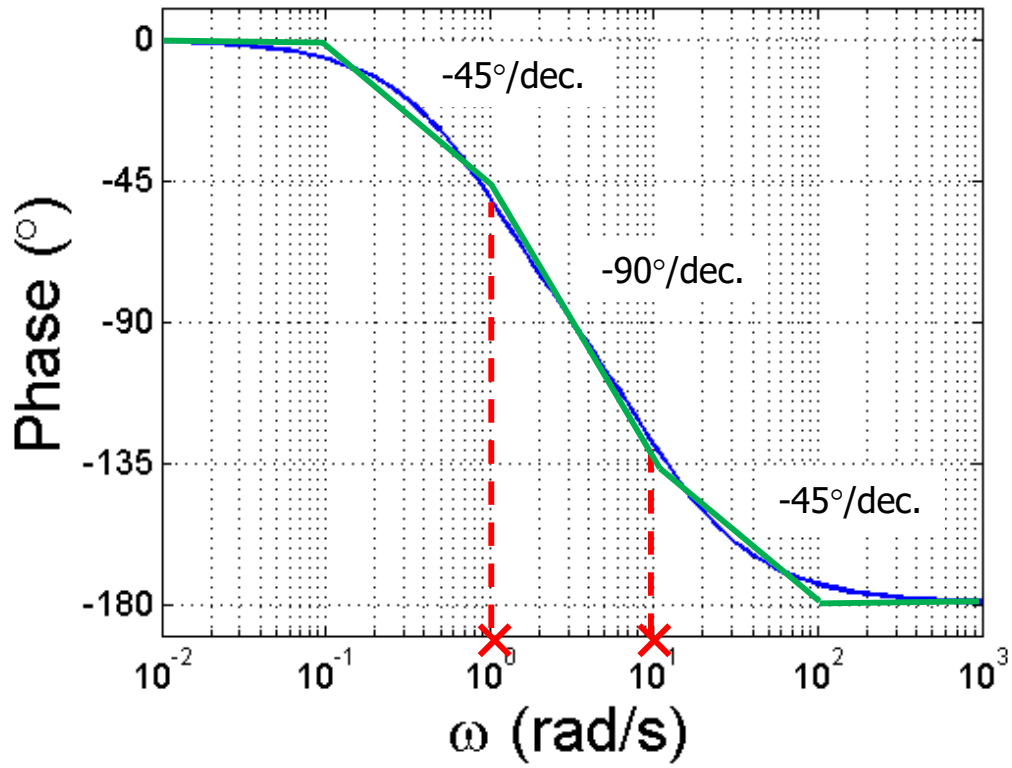

- If poles are spaced by less than 2 decades, there is a region of -90°/dec phase slope
  - Watch out for system stability!

Second-Order Systems – Complex Poles

$$H(s) = \frac{k_1 \omega_0^2}{s^2 + s\frac{\omega_0}{Q} + \omega_0^2}$$

What is the low frequency magnitude?

$$|H(j0)| = k_1$$

What is the high frequency magnitude?

$$|H(j\omega)|\Big|_{\omega \Rightarrow \infty} = \frac{k_1 \omega_0^2}{\omega^2} \Rightarrow \text{-40dB/dec. slope at high frequencies}$$

What happens in the middle, particularly near ω_0?

$$|H(j\omega_0)| = \left| \frac{k_1 \omega_0^2}{-\omega_0^2 + j\frac{\omega_0^2}{Q} + \omega_0^2} \right| = k_1 Q$$

Note, if $Q > 1$ then the magnitude exceeds the low frequency value, i.e. frequency peaking occurs!

Frequency Peaking w/ Complex Poles

Where is the peak frequency?

$$\frac{d\left|H(j\omega)\right|^2}{d\omega} = \frac{d}{d\omega}\left(\frac{k_1^2\omega_0^4}{\left(\omega_0^2-\omega^2\right)^2+\left(\frac{\omega_0}{Q}\omega\right)^2}\right) = 0$$

$$\omega_{pk} = \omega_0\sqrt{1-\frac{1}{2Q^2}} \approx \omega_0 \text{ for large } Q$$

At ω_{pk}, the peak value is

$$T_{pk} = \frac{k_1 Q}{\sqrt{1-\frac{1}{4Q^2}}} \approx k_1 Q \text{ for large } Q$$

For k_1=1 and ω_0=1

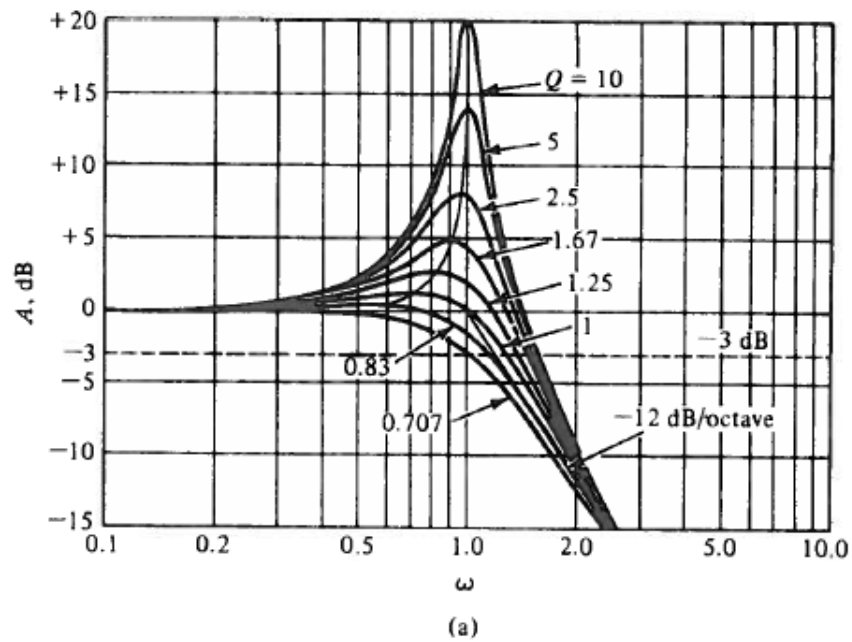

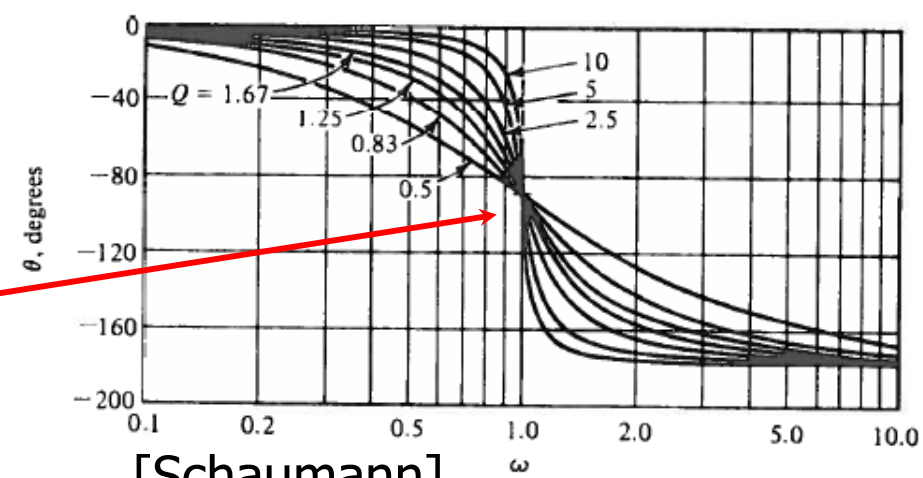

- Note, phase always crosses -90° at ω_0

[Schaumann]

Next Time

- PLL System Analysis

Review Material

- The following material reviews Laplace transforms, transfer functions, sinusoidal steady-state response, and Bode plots

- Please review this material, as it is fundamental for the analysis of the broadband circuits covered it the class

References

- *Continuous & Discrete Signal & System Analysis, 3rd Ed.,* C. McGillem and G. Cooper, Saunders College Publishing, 1991.

- *Feedback Control of Dynamic Systems, 3rd Ed.,* G. Franklin, J. Powell, and A. Emami-Naeini, Addison-Wesley, 1994.

- *Design of Analog Filters,* R. Schaumann and M. Van Valkenburg, Oxford University Press, 2001.

Laplace Transform

- Laplace transforms are useful for solving differential equations
- One-Sided Laplace Transform

$$\mathcal{L}\{x(t)\} = X(s) \equiv \int_0^\infty x(t)e^{-st}\,dt$$

where *s* is a complex variable

$$s = \sigma + j\omega$$

Note, $j = \sqrt{-1}$ and ω is the angular frequency (rad/s)

- *s* has units of inverse seconds (s^{-1})

Laplace Transform of Signals

Laplace Transforms of Signals

$X(s)$	$x(t)$	$X(s)$	$x(t)$
s^n	$\delta^{(n)}(t)$	$\frac{\beta}{s^2+\beta^2}$	$\sin \beta t u(t)$
s	$\delta'(t)$	$\frac{s}{s_2+\beta^2}$	$\cos \beta t u(t)$
1	$\delta(t)$	$\frac{\beta}{(s+\alpha)^2+\beta^2}$	$e^{-\alpha t} \sin \beta t u(t)$
$\frac{1}{s}$	$u(t)$	$\frac{s+\alpha}{(s+\alpha)^2+\beta^2}$	$e^{-\alpha t} \cos \beta t u(t)$
$\frac{1}{s^2}$	$tu(t)$	$\frac{1}{(s+a)(s+b)}$	$\frac{e^{-at}-e^{-bt}}{b-a} u(t)$
$\frac{1}{s^n}$	$\frac{t^{n-1}}{(n-1)!} u(t)$	$\frac{s+c}{(s+a)(s+b)}$	$\frac{(c-a)e^{-at}-(c-b)e^{-bt}}{b-a} u(t)$
$\frac{1}{s+\alpha}$	$e^{-\alpha t}u(t)$		
$\frac{1}{(s+\alpha)^2}$	$te^{-\alpha t}u(t)$		

[McGillem]

Laplace Transform of Operations

Laplace Transforms of Operations

$x(t)$	$X(s)$
$a_1x_1(t) + a_2x_2(t)$	$a_1X_1(s) + a_2X_2(s)$
$x'(t)$	$sX(s) - x(0^-)$
$\int_0^t x(\xi)\, d\xi$	$\frac{1}{s}X(s)$
$tx(t)$	$-\frac{dX(s)}{ds}$
$\frac{1}{t}x(t)$	$\int_s^\infty X(\xi)\, d\xi$
$x(t - t_0)u(t - t_0)$	$e^{-st_0}X(s)$
$e^{-at}x(t)$	$X(s + a)$
$x(at),\ a > 0$	$\frac{1}{a}X\left(\frac{s}{a}\right)$
$x_1 * x_2 = \int_0^t x_1(\lambda)x_2(t - \lambda)\, d\lambda$	$X_1(s)X_2(s)$
$x(0^+)$	$\lim_{s\to\infty} sX(s)$
$x(\infty)$	$\lim_{s\to 0} sX(s)$ [$X(s)$ left-half-plane poles only]
$x''(t)$	$s^2X(s) - sx(0^-) - x'(0^-)$
$x_1(t)x_2(t)$	$\frac{1}{2\pi j}\int_{c-j\infty}^{c+j\infty} X_1(s - \lambda)X_2(\lambda)\, d\lambda$

[McGillem]

Resistor s-Domain Equivalent Circuit

Time-domain Representation:

$$v(t) = Ri(t)$$

$$i(t) = \frac{1}{R}v(t)$$

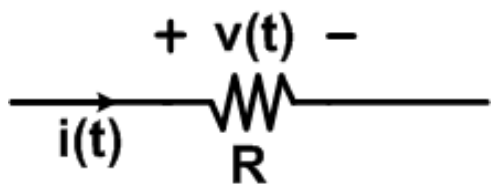

Complex Frequency Representation:

$$V(s) = RI(s)$$

$$I(s) = \frac{1}{R}V(s)$$

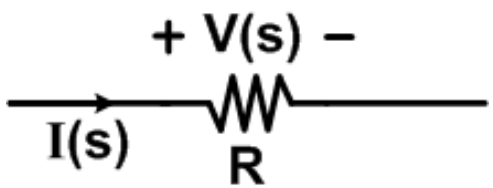

Capacitor s-Domain Equivalent Circuit

Time-domain Representation:

$$v(t) = \frac{1}{C}\int_0^t i(\lambda)d\lambda + v(0)$$

$$i(t) = C\frac{dv}{dt}$$

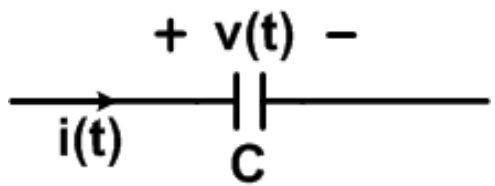

Complex Frequency Representation:

$$V(s) = \frac{1}{sC}I(s) + \frac{1}{s}v(0)$$

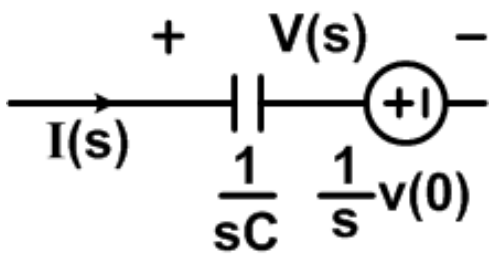

$$I(s) = sCV(s) - Cv(0)$$

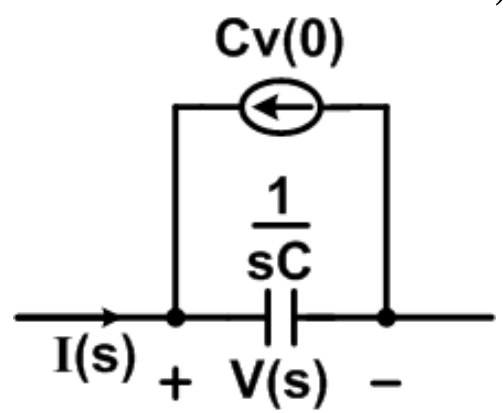

Inductor s-Domain Equivalent Circuit

Time-domain Representation:

$$v(t) = L\frac{di}{dt}$$

$$i(t) = \frac{1}{L}\int_0^t v(\lambda)d\lambda + i(0)$$

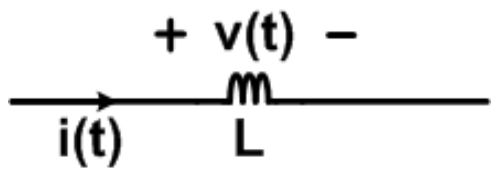

Complex Frequency Representation:

$$V(s) = sL(s) - Li(0)$$

$$I(s) = \frac{1}{sL}V(s) + \frac{1}{s}i(0)$$

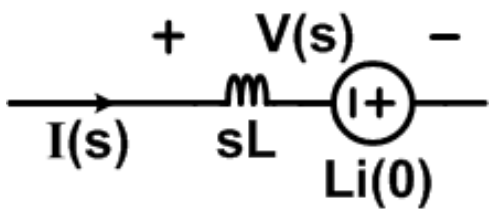

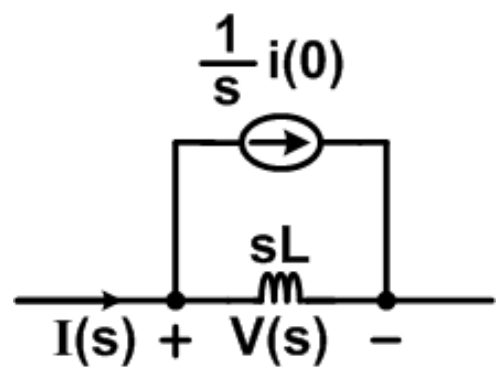

s-Domain Impedance w/o I.C.

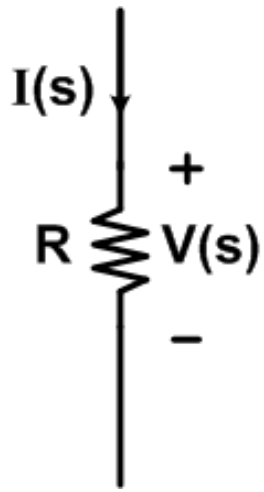

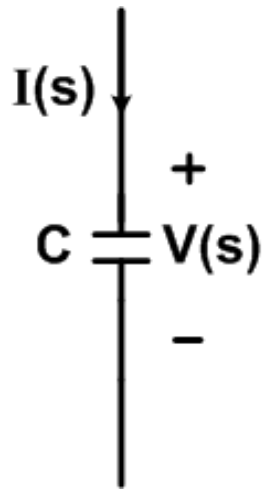

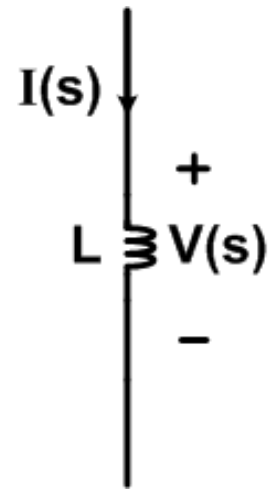

$$V(s) = I(s)R$$

$$Z(s) = R$$

$$V(s) = I(s)\frac{1}{SC}$$

$$Z(s) = \frac{1}{sC}$$

$$V(s) = I(s)sL$$

$$Z(s) = sL$$

Transfer Function

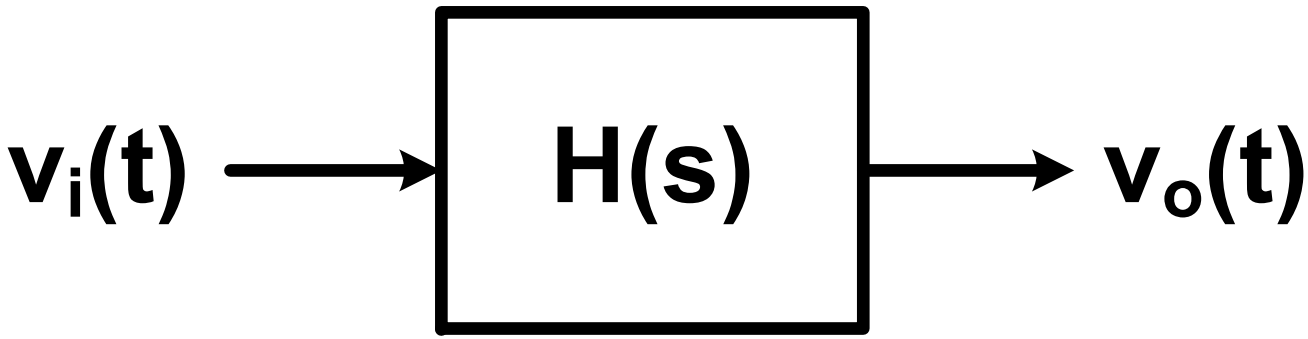

$$H(s) = \frac{\mathcal{L}\{v_o(t)\}}{\mathcal{L}\{v_i(t)\}} = \frac{V_o(s)}{V_i(s)}$$

- The transfer function H(s) of a network is the ratio of the Laplace transform of the output and input signals when the initial conditions are zero
- This is also the Laplace transform of the network's impulse response

RC Transfer Function

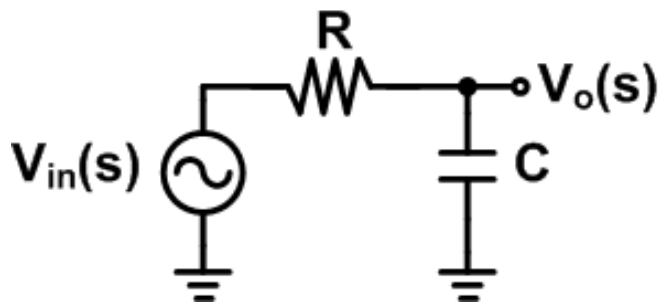

$$V_o(s) = \frac{Z_C}{Z_R + Z_C} V_{in}(s) = \frac{\frac{1}{sC}}{R + \frac{1}{sC}} V_{in}(s) = \frac{1}{1 + sRC} V_{in}(s)$$

<u>AC Transfer Function, H(S)</u>

$$H(s) = \frac{V_o(s)}{V_{in}(s)} = \frac{1}{1 + sRC}$$

Laplace Transform Circuit Example

Given $v_o(0) = 0$

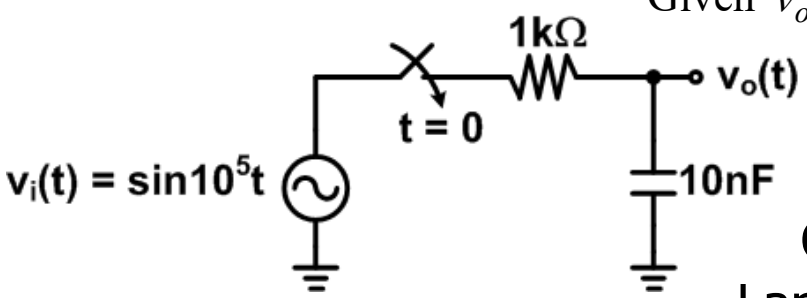

Convert to Laplace Domain

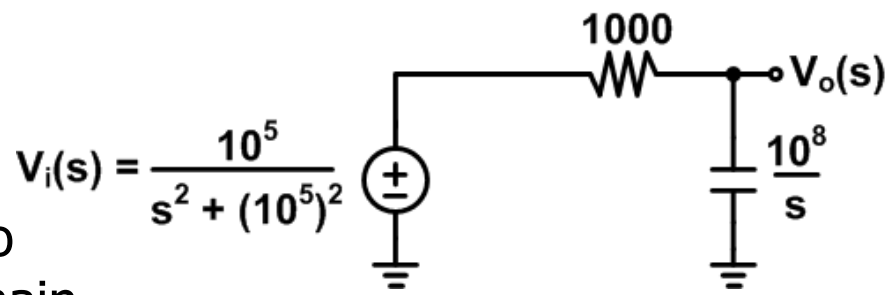

$$H(s) = \frac{V_o(s)}{V_{in}(s)} = \frac{1}{1 + sRC} = \frac{1}{1 + \frac{s}{10^5}} = \frac{10^5}{s + 10^5}$$

$$V_o(s) = H(s)V_i(s) = \left(\frac{10^5}{s + 10^5}\right)\left(\frac{10^5}{s^2 + \left(10^5\right)^2}\right)$$

with partial fraction expansion

$$V_o(s) = \frac{\frac{1}{2}}{s + 10^5} - \frac{\frac{1}{2}s}{s^2 + \left(10^5\right)^2} + \frac{\frac{1}{2}\left(10^5\right)}{s^2 + \left(10^5\right)^2}$$

with inverse Laplace Transform

$$\mathrm{v_o}(t) = \frac{1}{2}e^{-10^5 t} - \frac{1}{2}\cos 10^5 t + \frac{1}{2}\sin 10^5 t = \frac{1}{2}e^{-10^5 t} + \frac{1}{\sqrt{2}}\sin\left(10^5 t - 45^\circ\right)$$

Laplace Transform Circuit Example

We can decompose the output into it's transient and steady - state response

$$v_o(t) = \frac{1}{2}e^{-10^5 t} + \frac{1}{\sqrt{2}}\sin\left(10^5 t - 45^\circ\right) = v_{tr}(t) + v_{ss}(t)$$

$$v_{tr}(t) = \frac{1}{2}e^{-10^5 t}$$

$$v_{ss}(t) = \frac{1}{\sqrt{2}}\sin\left(10^5 t - 45^\circ\right)$$

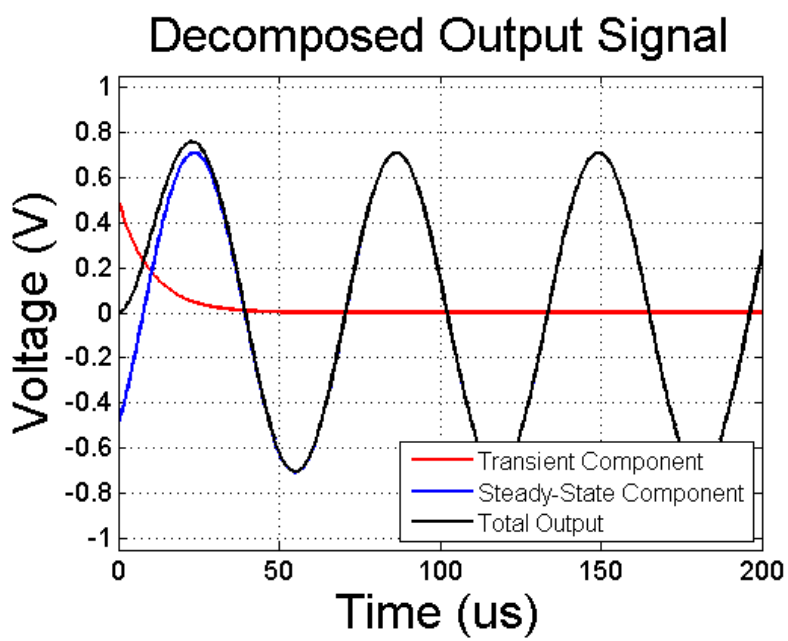

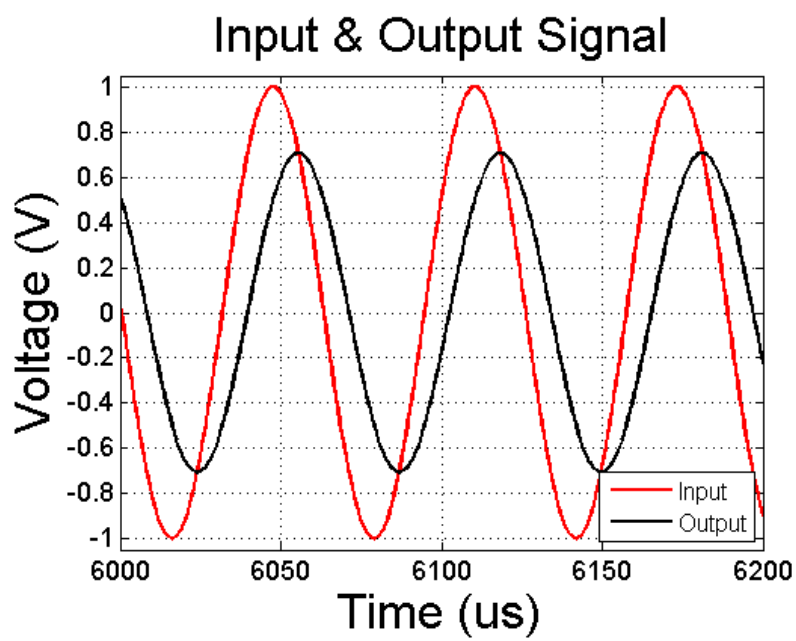

- Note that the transient response decays very quickly!

Sinusoidal Steady-State Response

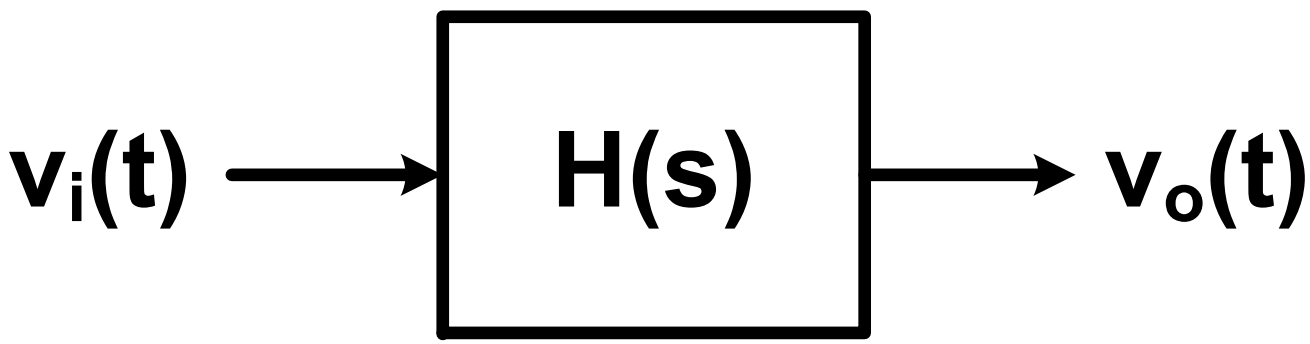

If input $v_i(t)$ is sinusoidal

$$v_i(t) = A\cos(\omega t + \phi)$$

The steady - state output will be

$$v_{ss}(t) = |H(j\omega)| A\cos(\omega t + \phi + \angle H(j\omega))$$

RC Circuit Sinusoidal Steady-State Response

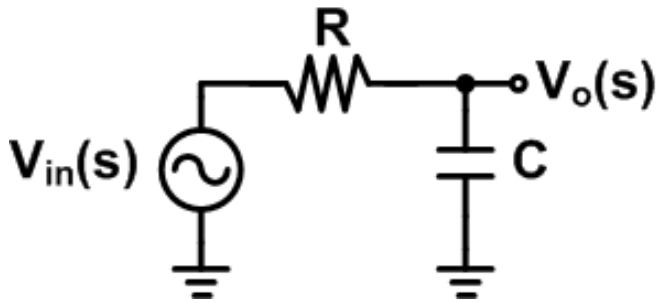

$$H(s)=\frac{V_o(s)}{V_{in}(s)}=\frac{1}{1+sRC}\overset{s=j\omega}{\Rightarrow}H(j\omega)=\frac{1}{1+j\omega RC}$$

Output Magnitude

$$|H(j\omega)|=\sqrt{H(j\omega)H^*(j\omega)}=\sqrt{\left(\frac{1}{1+j\omega RC}\right)\left(\frac{1}{1-j\omega RC}\right)}$$

$$\boxed{|H(j\omega)|=\sqrt{\frac{1}{1+(\omega RC)^2}}}$$

Output Phase

$$\angle H(j\omega)=\tan^{-1}\left(\frac{\mathrm{Im}(H(j\omega))}{\mathrm{Re}(H(j\omega))}\right)=\tan^{-1}\left(\frac{\mathrm{Im}(Num)}{\mathrm{Re}(Num)}\right)-\tan^{-1}\left(\frac{\mathrm{Im}(Den)}{\mathrm{Re}(Den)}\right)$$

where Num = Numerator and Den = Denominator of $H(j\omega)$

$$\angle H(j\omega)=\tan^{-1}\left(\frac{0}{1}\right)-\tan^{-1}\left(\frac{\omega RC}{1}\right)=-\tan^{-1}(\omega RC)$$

$$\boxed{\angle H(j\omega)=-\tan^{-1}(\omega RC)}$$

RC Circuit Sinusoidal Steady-State Response Example

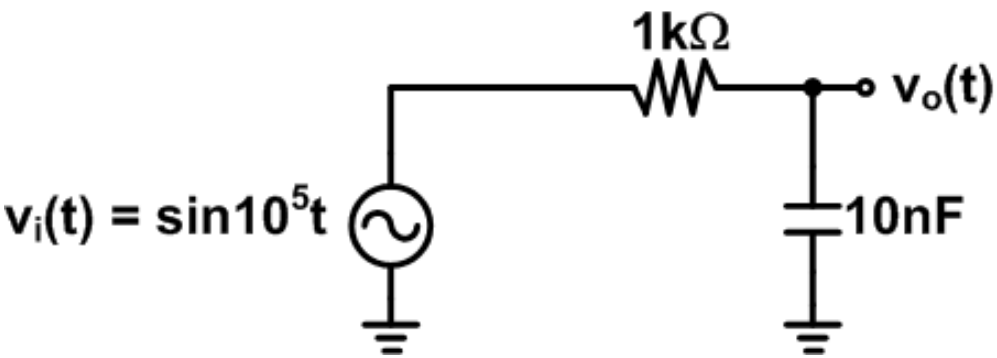

$$H(s) = \frac{1}{1 + \frac{s}{10^5}}$$

with $s = j\omega = j10^5$

$$H\left(j10^5\right) = \frac{1}{1+j}$$

$$\left|H\left(j10^5\right)\right| = \sqrt{\frac{1}{2}} = \frac{1}{\sqrt{2}}$$

$$\angle H\left(j10^5\right) = -\tan^{-1}(1) = -45^\circ$$

$$v_{ss}(t) = \frac{1}{\sqrt{2}} \sin\left(10^5 t - 45^\circ\right)$$

Complex Numbers Properties

[Silva]

Function	Evaluation
$f(x) = R + j\,Im$	$f(x) = \lvert f(x)\rvert e^{j\phi_f}$ $\lvert f(x)\rvert = \sqrt{R^2 + Im^2}$ $\phi_f = tan^{-1}(Im/R)$
$f(x)\cdot g(x)$	$\lvert f(x)\rvert \cdot \lvert g(x)\rvert e^{j(\phi_f+\phi_g)}$
$\dfrac{f(x)}{g(x)}$	$\dfrac{\lvert f(x)\rvert}{\lvert g(x)\rvert} e^{j(\phi_f-\phi_g)}$
$\dfrac{f_1(x)\cdot f_2(x)\ldots f_n(x)}{g_1(x)\cdot g_2(x)\ldots g_m(x)}$	$\dfrac{\lvert f_1(x)\rvert\cdot\lvert f_2(x)\rvert\ldots\lvert f_n(x)\rvert}{\lvert g_1(x)\rvert\cdot\lvert g_2(x)\rvert\ldots\lvert g_m(x)\rvert} e^{j\left(\sum_{i=1}^{n}\phi_{fi}-\sum_{k=1}^{m}\phi_{gk}\right)}$

<u>Numerical Example</u>

$$\frac{(1+j10)(10+j10)}{(100+j10)(1000+j10)}$$

$$\left|\frac{(1+j10)(10+j10)}{(100+j10)(1000+j10)}\right| = \frac{\sqrt{1^2+10^2}\sqrt{10^2+10^2}}{\sqrt{100^2+10^2}\sqrt{1000^2+10^2}} = 1.41\times10^{-3}$$

$$\angle\frac{(1+j10)(10+j10)}{(100+j10)(1000+j10)} = \tan^{-1}\left(\frac{10}{1}\right)+\tan^{-1}\left(\frac{10}{10}\right)-\tan^{-1}\left(\frac{10}{100}\right)-\tan^{-1}\left(\frac{10}{1000}\right) = 123^\circ$$

Poles & Zeros

$$H(s) = A\frac{(s-z_1)(s-z_2)\ldots(s-z_m)}{(s-p_1)(s-p_2)\ldots(s-p_n)}$$

- Poles are the roots of the denominator (p_1, p_2, … p_n) where $H(s)\rightarrow\infty$
- Zeros are the roots of the numerator (z_1, z_2, … z_m) where $H(s)\rightarrow 0$

$$\text{Example 1: } H(s) = \frac{10^5}{s+10^5}$$

$$s + 10^5 = 0$$

$$p_1 = s = -10^5\, rad/s$$

$$\text{Example 2: } H(s) = \frac{s}{s+10^5}$$

$$z_1 = s = 0 rad/s$$

$$s + 10^5 = 0$$

$$p_1 = s = -10^5\, rad/s$$

$$\text{Example 3: } H(s) = \frac{100(s+15)}{s^2+50s+1500}$$

$$s + 15 = 0$$

$$z_1 = s = -15 rad/s$$

$$s^2 + 50s + 1500 = 0$$

$$p_{1,2} = s_{1,2} = \frac{-50 \pm \sqrt{2500-6000}}{2} = -25 \pm j29.6 rad/s$$

Bode Plots

- Technique to plot the **Magnitude** (squared) and **Phase** response of a transfer function
  - Magnitude is plotted in Decibels (dB), which is a power ratio unit

$$\left|H(j\omega)\right|^2 \overset{dB}{\Rightarrow} 10\log_{10}\left(\left|H(j\omega)\right|^2\right)(\mathrm{dB}) = 20\log_{10}\left(\left|H(j\omega)\right|\right)(\mathrm{dB})$$

  - Phase is typically plotted in degrees

$$\angle\left(H(j\omega)\right) = \tan^{-1}\left(\frac{\mathrm{Im}\left(H(j\omega)\right)}{\mathrm{Re}\left(H(j\omega)\right)}\right)$$

RC Bode Plot Example

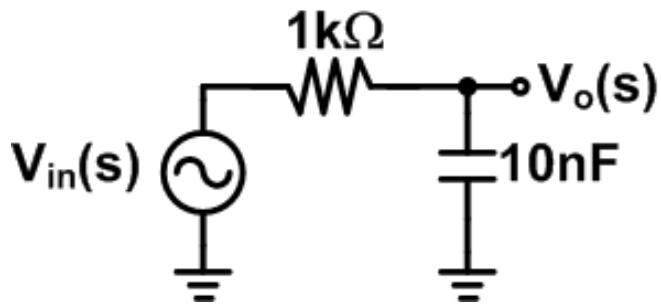

$$H(s)=\frac{V_o(s)}{V_{in}(s)}=\frac{1}{1+sRC}=\frac{1}{1+s10^{-5}}=\frac{1}{1+j\omega 10^{-5}}$$

$$H(s)=\frac{1}{1+j\omega 10^{-5}}=\frac{1}{1-\frac{j\omega}{p_1}},\ \text{where } p_1=-10^5 \text{ rad/s}$$

Magnitude Squared (dB):

$$20\log_{10}\left|H(j\omega)\right|=20\log_{10}\left|\frac{1}{\sqrt{1+\left(\omega 10^{-5}\right)^2}}\right|=20\log_{10}(1)-20\log_{10}\left(\sqrt{1+\left(\omega 10^{-5}\right)^2}\right)$$

Phase: $\text{Phase}\left(H(j\omega)\right)=-\tan^{-1}\left(\omega 10^{-5}\right)$

RC Bode Plot Example

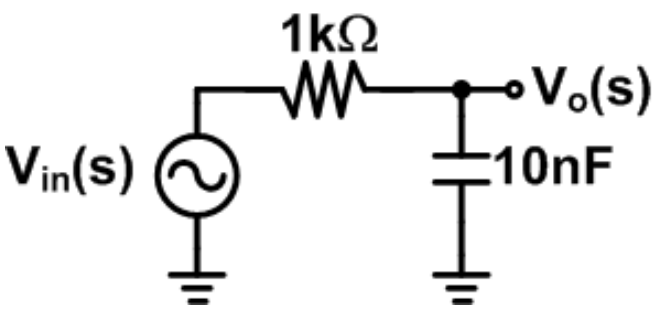

Magnitude:

$$20\log_{10}\left|H(j\omega)\right| = 20\log_{10}\left|\frac{1}{\sqrt{1+\left(\omega 10^{-5}\right)^2}}\right| = 20\log_{10}(1) - 20\log_{10}\left(\sqrt{1+\left(\omega 10^{-5}\right)^2}\right)$$

Phase: $\text{Phase}\left(H(j\omega)\right) = -\tan^{-1}\left(\omega 10^{-5}\right)$

~$20\log_{10}$ (1) = 0dB

~$-20\log_{10}$ ($\omega 10^{-5}$) = -20dB/dec

ω (rad/s)	|H(jω)|	|H(jω)|²	$20\log_{10}$|H(jω)| (dB)	Phase (H(jω)) (°)
10^3	0.9999	0.9999	~0	~0
10^4	0.995	0.990	-0.043	-5.71
5×10^4	0.894	0.800	-0.969	-26.6
10^5	0.707	0.500	-3.01	-45.0
5×10^5	0.196	0.039	-14.2	-78.7
10^6	0.100	0.010	-20.0	-84.3
10^7	10^{-2}	10^{-4}	-40.0	-89.4
10^8	10^{-3}	10^{-6}	-60.0	-89.9

-45°/dec

RC Bode Plot Example

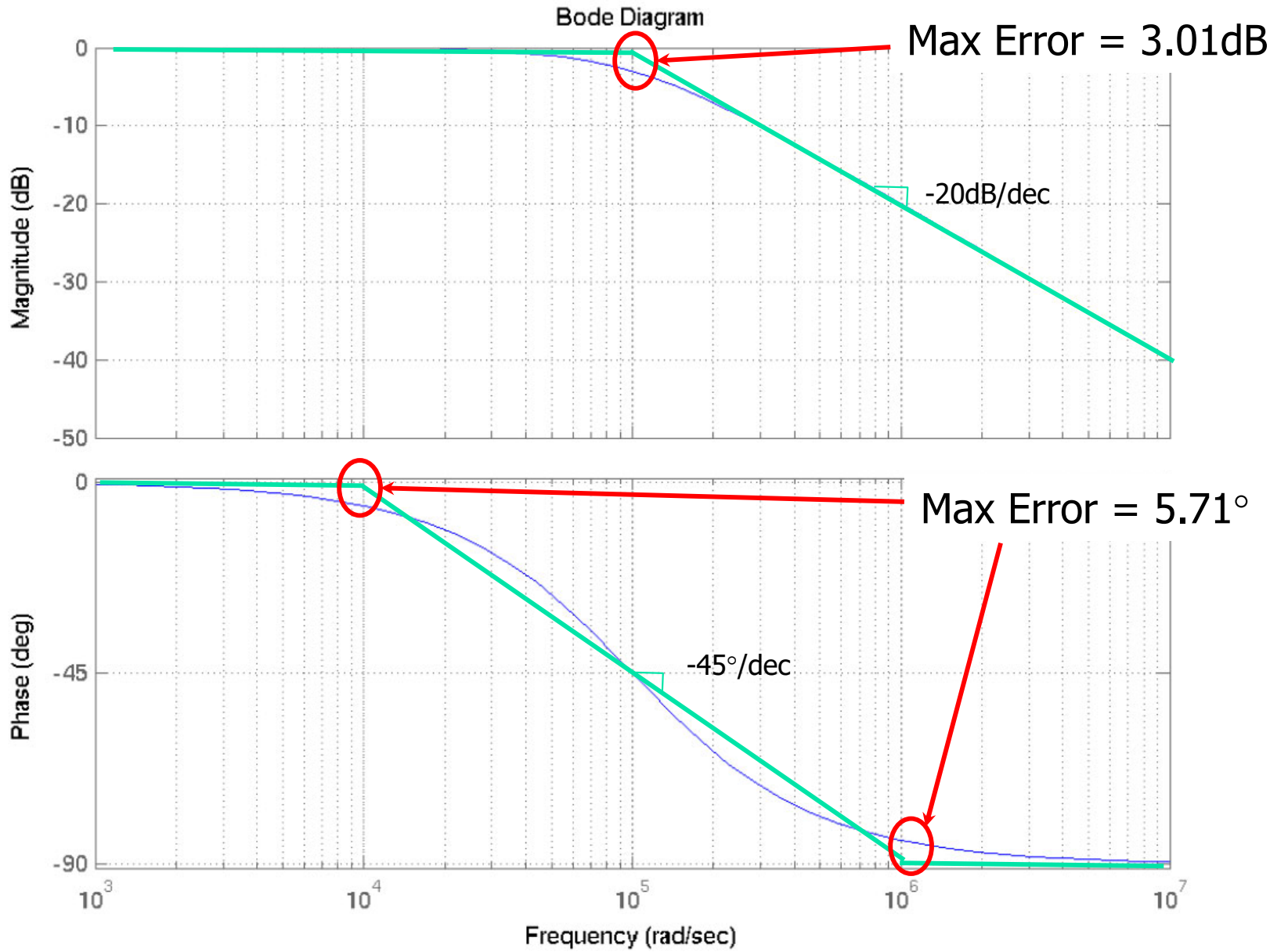

Transient Response

$\omega = 10^3$ rad/s = -p1/100

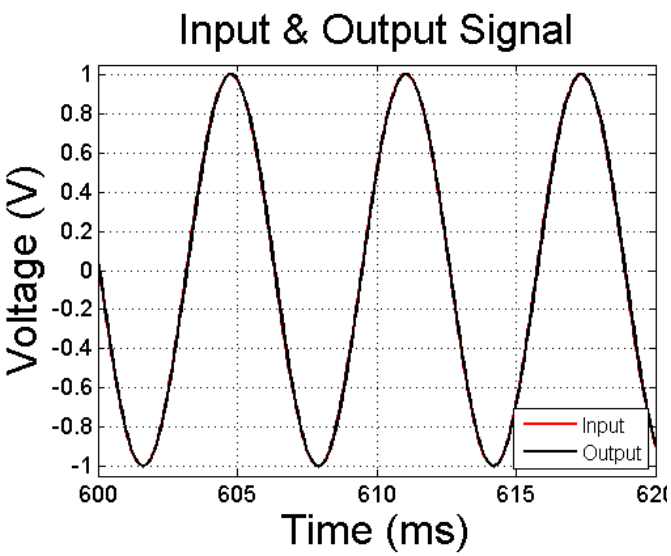

$$|v_o(t)| \approx 1$$

$$\text{Phase Shift} \approx 0^\circ$$

$\omega = 10^5$ rad/s = -p1

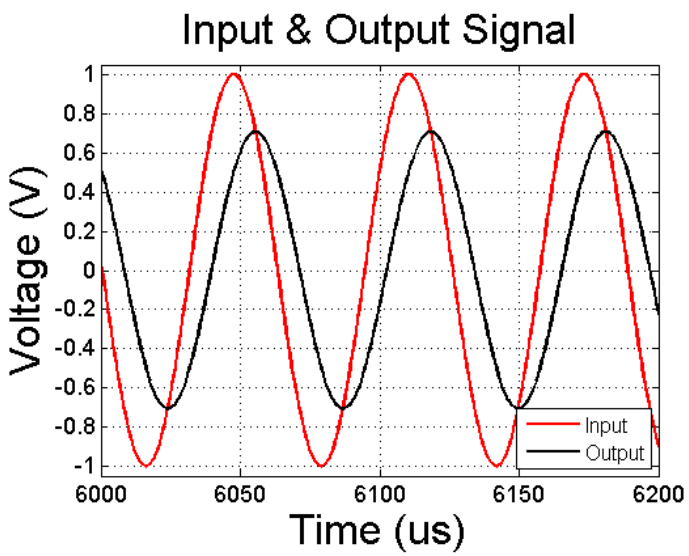

$$|v_o(t)| = \frac{1}{\sqrt{2}}$$

$$\text{Phase Shift} = -45^\circ$$

$\omega = 10^6$ rad/s = 10*p1

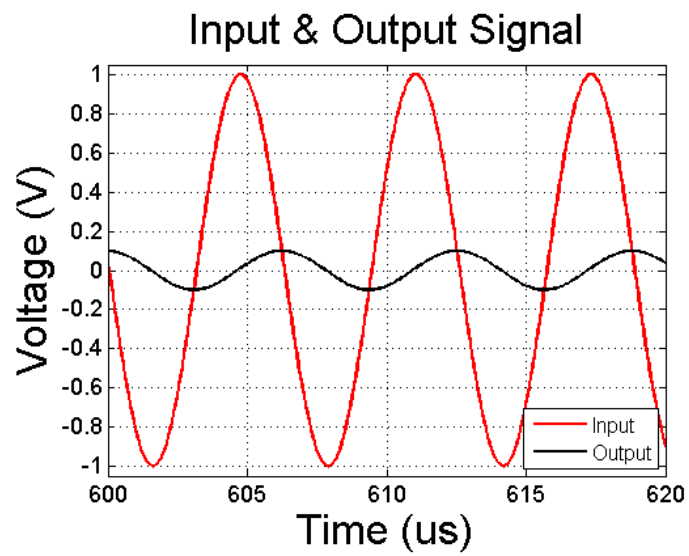

$$|v_o(t)| \approx 0.1$$

$$\text{Phase Shift} = -84.3^\circ$$

Bode Plot Algorithm - Magnitude

1. Where is a good starting point?
   a. Calculate DC value of $|H(j\omega)|$
   b. If not a reasonable value, I like to calculate $|H(j\omega)|$ at ω equal to the lowest value of p1/10 or z1/10
2. Where to end?
   a. Calculate $|H(j\omega)|$ as $\omega \rightarrow \infty$
3. Where are the poles and zeros?
   a. Beginning at each pole frequency, the magnitude will decrease with a slope of -20dB/dec
   b. Beginning at each zero frequency, the magnitude will increase with a slope of +20dB/dec
4. Note, the above algorithm is only valid for real poles and zeros. We will discuss complex poles later.

Bode Plot Algorithm - Magnitude

$$H(s) = -\frac{10^4(s+1)}{(s+10)(s+100)} = -\frac{10(1+s)}{\left(1+\frac{s}{10}\right)\left(1+\frac{s}{100}\right)}$$

$$20\log_{10}|H(j\omega)| = 20\log_{10}\left|\frac{10\sqrt{1+\omega^2}}{\sqrt{1+(\omega 10^{-1})^2}\sqrt{1+(\omega 10^{-2})^2}}\right| =$$

$$20\log_{10}(10) + 20\log_{10}\left(\sqrt{1+\omega^2}\right) - 20\log_{10}\left(\sqrt{1+(\omega 10^{-1})^2}\right) - 20\log_{10}\left(\sqrt{1+(\omega 10^{-2})^2}\right)$$

$$\text{DC Magnitude} = 10 = 20dB$$

$$\text{HF Magnitude} = 0 = -\infty dB$$

$$z_1 = -1,\ p_1 = -10,\ p_2 = -100$$

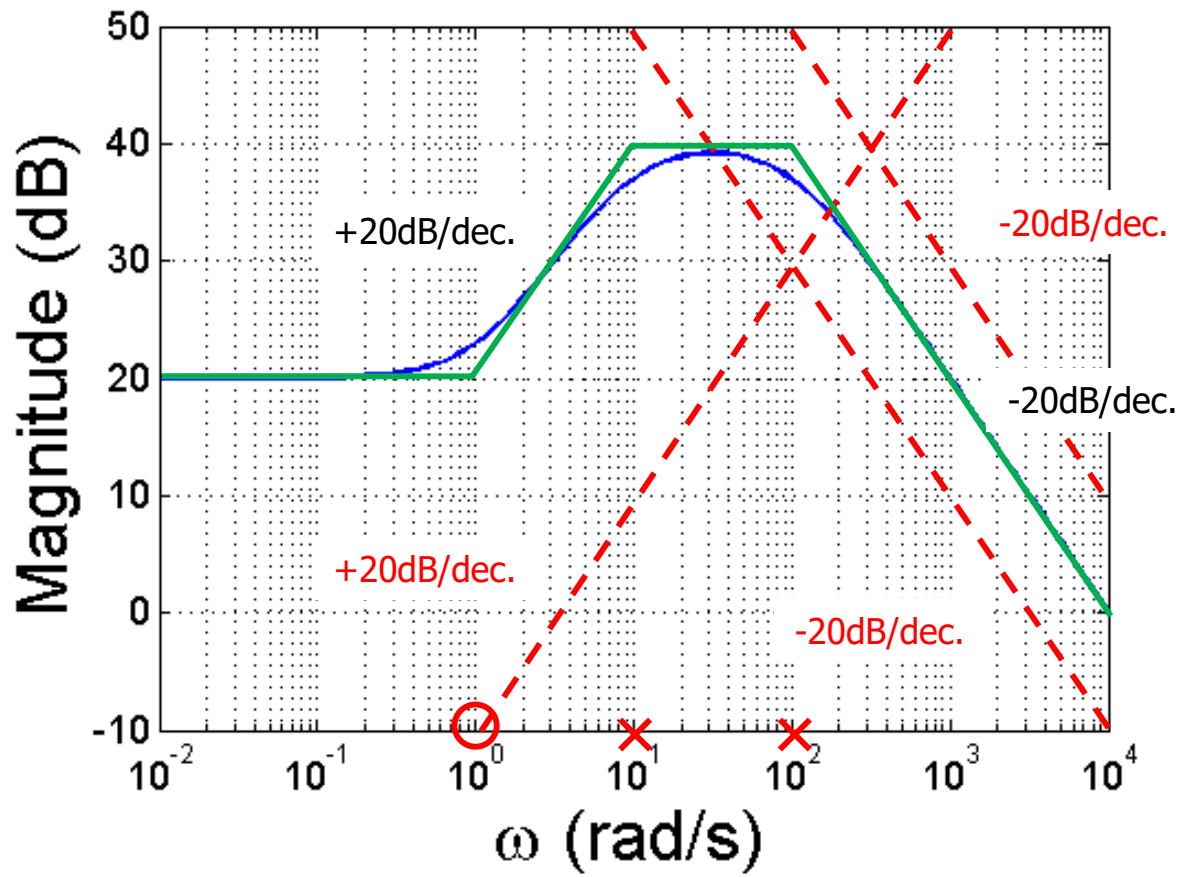

Bode Plot Algorithm - Phase

1. Calculate low frequency value of Phase($H(j\omega)$)
   a. An negative sign introduces -180° phase shift
   b. A DC pole introduces -90° phase shift
   c. A DC zero introduces +90° phase shift
2. Where are the poles and zeros?
   a. For negative poles: 1 dec. before the pole freq., the phase will decrease with a slope of -45°/dec. until 1 dec. after the pole freq., for a total phase shift of -90°
   b. For zeros poles: 1 dec. before the zero freq., the phase will increase with a slope of +45°/dec. until 1 dec. after the zero freq., for a total phase shift of +90°
   c. Note, if you have positive poles or zeros, the phase change polarity is inverted
3. Note, the above algorithm is only valid for real poles and zeros. We will discuss complex poles later.

Bode Plot Algorithm - Phase

$$H(s) = -\frac{10^4(s+1)}{(s+10)(s+100)} = -\frac{10(1+s)}{\left(1+\frac{s}{10}\right)\left(1+\frac{s}{100}\right)}$$

$$\angle H(j\omega) = -180^\circ + \tan^{-1}\left(\frac{\omega}{1}\right) - \tan^{-1}\left(\frac{\omega}{10}\right) - \tan^{-1}\left(\frac{\omega}{100}\right)$$

$$\text{LF Phase} = -180^\circ$$

$$z_1 = -1,\ p_1 = -10,\ p_2 = -100$$