Texas A&M University
Department of Electrical and Computer Engineering

ECEN 620 – Network Theory (Broadband Circuit Design)

Fall 2020

Exam #1

Instructor: Sam Palermo

- Please write your name in the space provided below
- Please verify that there are **6** pages in your exam
- You may use <u>one</u> double-sided page of notes and equations for the exam
- Good Luck!

Problem	Score	Max Score
1		40
2		60
Total		**100**

Name: SAM PALERMO

UIN:

Problem 1 (40 points)
Select the proper PLL architecture to track a frequency ramp of 10^{12} rad/s^2 with a steady-state phase error of 0.01 rad. Assume that $K_{VCO}=2\pi*(1GHz/V)$ and that the loop filter utilizes a 1nF capacitor. Additional circuitry should be added to the loop filter to achieve a $\zeta=2$. **Give the value of K_{PD} (include correct units), draw the loop filter and label the filter component values.**

A 2nd-Order Type 2 PLL is required to track a frequency ramp

$$E(s) = \frac{s^2}{s^2 + 2\zeta\omega_n s + \omega_n^2}$$

Frequency Ramp: $\phi_{in}(s) = \frac{\Lambda}{s^3}$

$$\phi_{e,ss} = \lim_{s\to 0} \frac{\Lambda}{s^3} \frac{s \cdot s^2}{s^2 + 2\zeta\omega_n s + \omega_n^2} = \frac{\Lambda}{\omega_n^2} = 0.01\,rad$$

$$\Rightarrow \omega_n = \sqrt{\frac{\Lambda}{\phi_{e,ss}}} = \sqrt{\frac{10^{12}\,rad/s^2}{0.01\,rad}} = 10^7\,rad/s$$

$$\omega_n = \sqrt{\frac{K_{PD}K_{VCO}}{C}}$$

$$K_{PD} = \frac{\omega_n^2 C}{K_{VCO}} = \frac{(10^7\,rad/s)^2(1nF)}{2\pi(1GHz/V)} = \frac{100\mu A}{2\pi}$$

$$\boxed{K_{PD} = \frac{100\mu A}{2\pi}}$$

$$R = \frac{2\zeta}{\omega_n C} = \frac{2(2)}{(10^7\,rad/s)(1nF)} = 400\Omega$$

Loop Filter:

Problem 2 (60 points)
For the PLL shown below, assume that the VCO gain is K_{VCO} is positive, all transistors are operating in saturation with $r_o=\infty$ and you can ignore any transistor device capacitors.

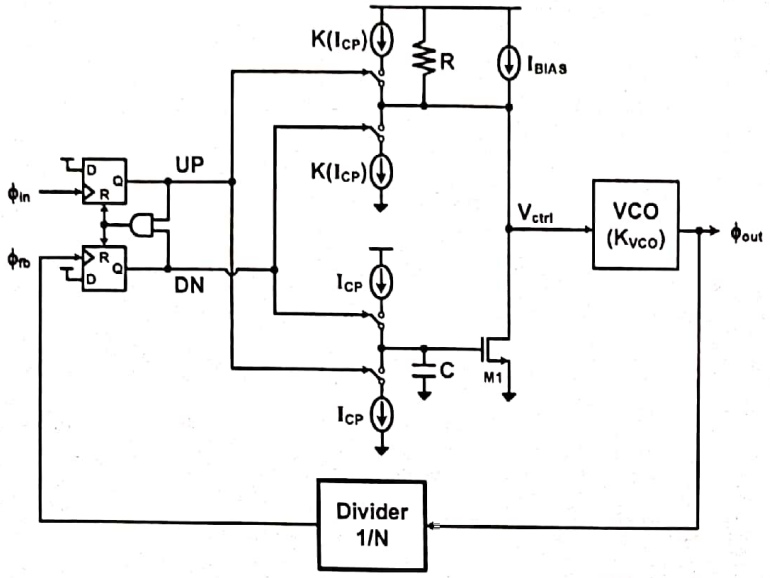

a) Draw the phase domain small signal model of the loop.

b) Find the expressions for the product of the forward path gain and feedback factor, $\frac{G(s)}{N}$, and determine the pole-zero locations of $\frac{G(s)}{N}$.

a.

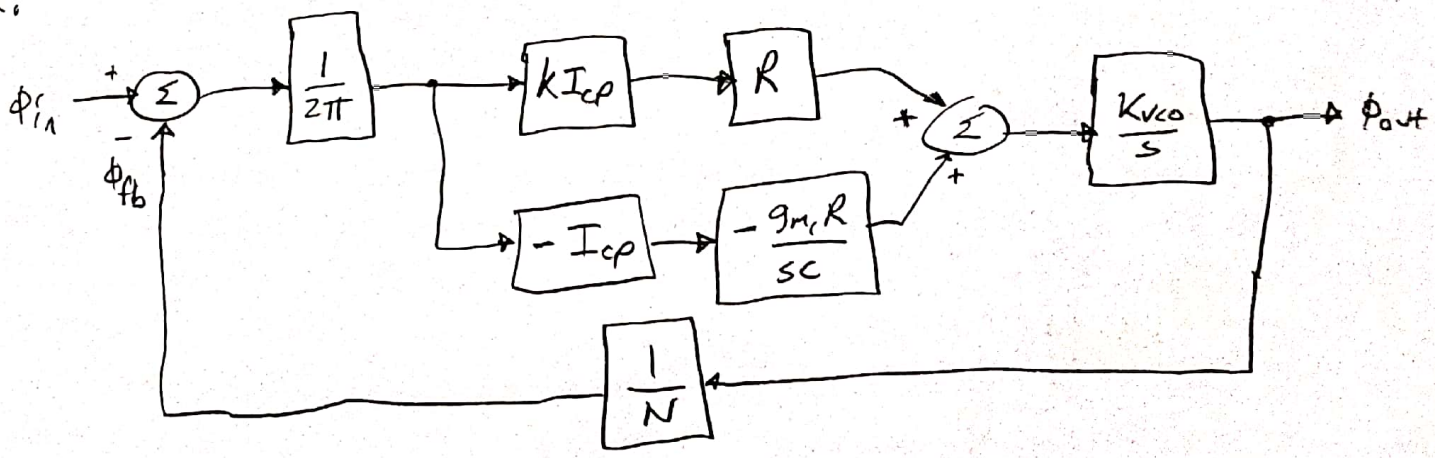

b. $$\frac{G(s)}{N} = \frac{1}{2\pi}\left[K I_{cp} R + I_{cp}\frac{g_{m1}R}{sC}\right]\left(\frac{K_{VCO}}{s}\right)\left(\frac{1}{N}\right)$$

$$\boxed{\frac{G(s)}{N} = \frac{\frac{K I_{cp} R K_{VCO}}{2\pi}\left(s + \frac{g_{m1}}{KC}\right)}{s^2 N}}$$

1 zero at $-\frac{g_{m1}}{KC}$

2 poles at ϕ

c) Assume that I_{CP}=10μA, K=10, R=50kΩ, K_{VCO}=2π*(1GHz/V), g_{m1}=20μA/V and N=50. What is the C value required for the $\frac{G(s)}{N}$ transfer function zero, ω_z, to equal 1Mrad/s? Sketch the $\frac{G(s)}{N}$ Bode Plot (magnitude and phase). What is the phase margin?

$$\omega_z = \frac{g_{m1}}{KC} \Rightarrow C = \frac{g_{m1}}{K\omega_n} = \frac{20\mu A/V}{10(1M\,rad/s)} = 2pF$$

$$\frac{G(s)}{N} = \frac{\frac{10(10\mu A)(50k\Omega)(2\pi\cdot 1GHz/V)}{2\pi}\left(s + \frac{20\mu A/V}{10(2pF)}\right)}{s^2\ 50} = \frac{5\times10^9(s+10^6)}{s^2\ 50}$$

At $\omega = 10^5$ $\left|\frac{G(j10^5)}{N}\right| \cong 10^4$

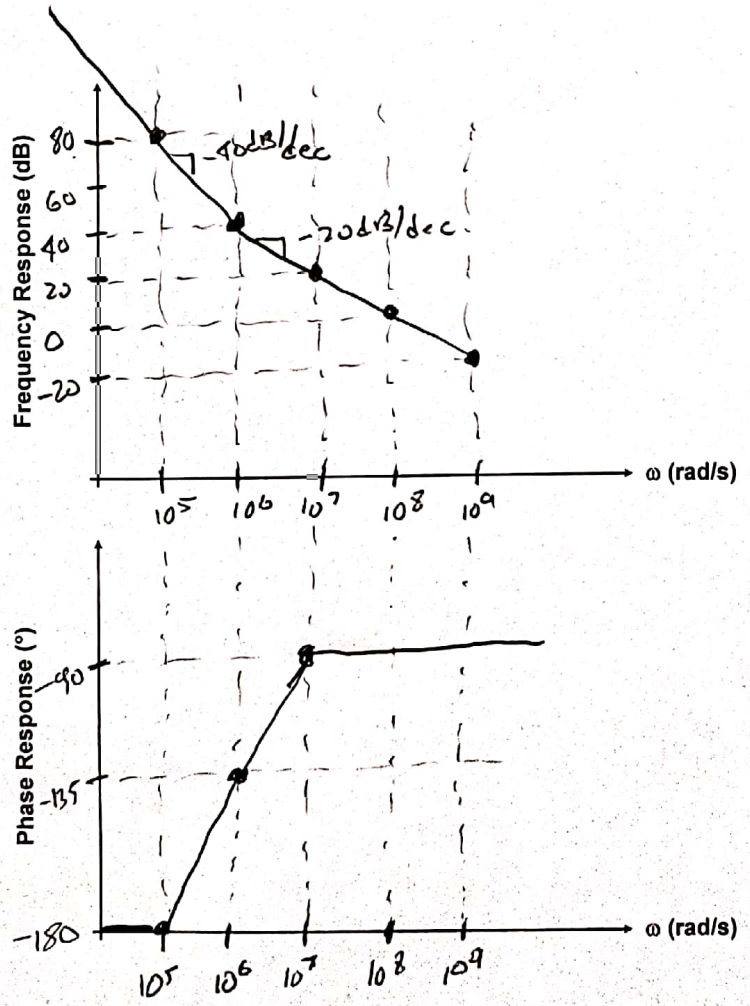

C = 2pF

Phase Margin = 90°

d) What is the phase relationship between ϕ_{in} and ϕ_{fb} when is PLL locked?

Due to the PFD, the loop will lock with a 0° phase difference.

$\phi_{in} - \phi_{fb} =$ 0°

Scratch Paper